# C-911 Hanger with C-108
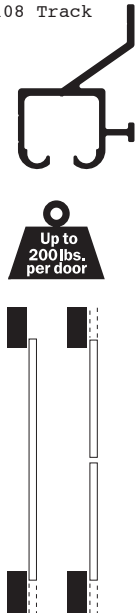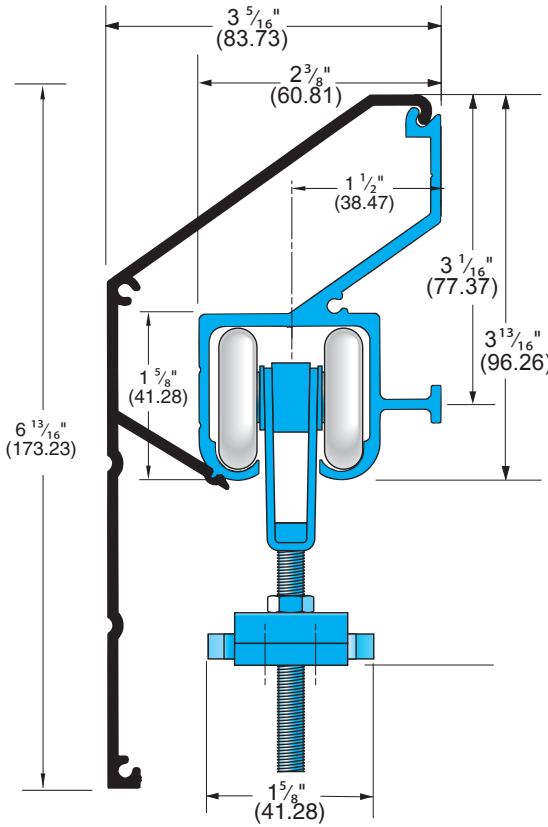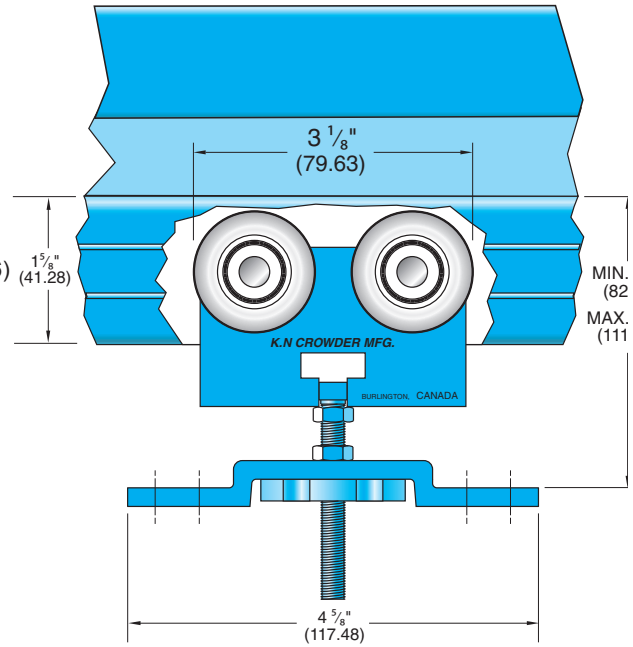
C-108 Track