C-107-4 Hanger with C-104 Track Detail

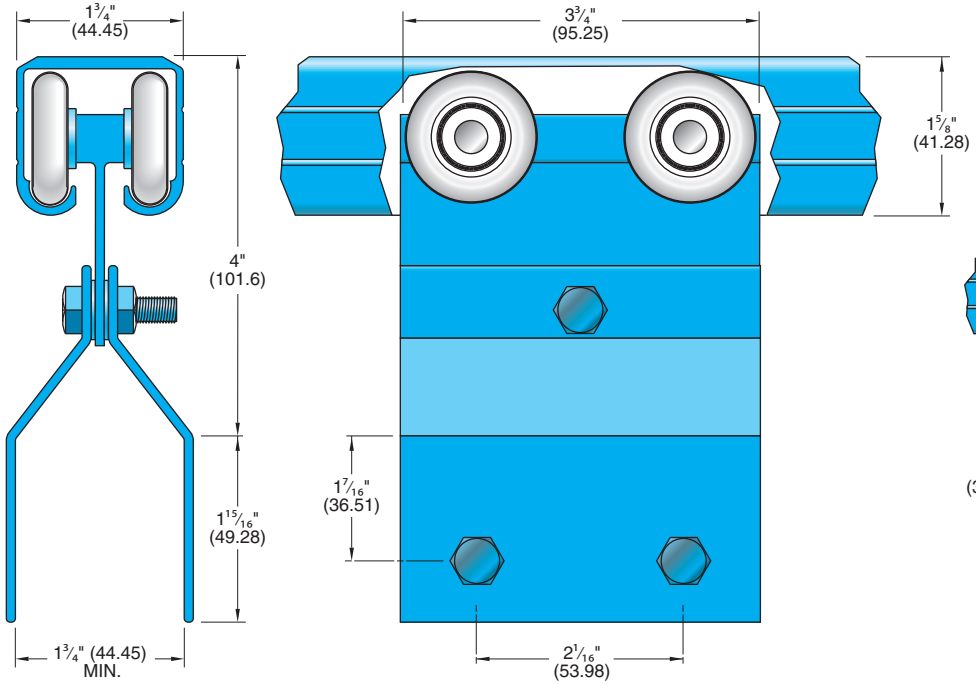

n Note: These are recommendations only, K.N.Crowder will provide track and hardware to your exact specifi cations and requirements.

C-107-8 Hanger with C-104 Track Detail