MOD. SYSTEM ECLETTICA FLUID
7002.03493_REV 00

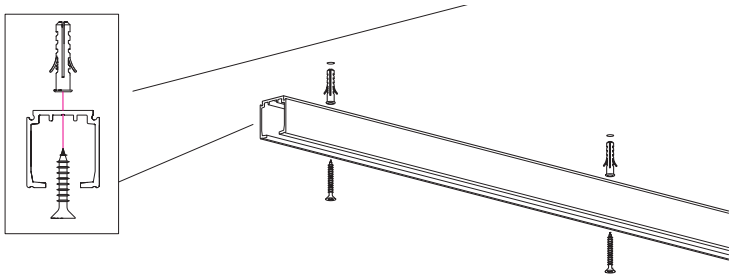

1

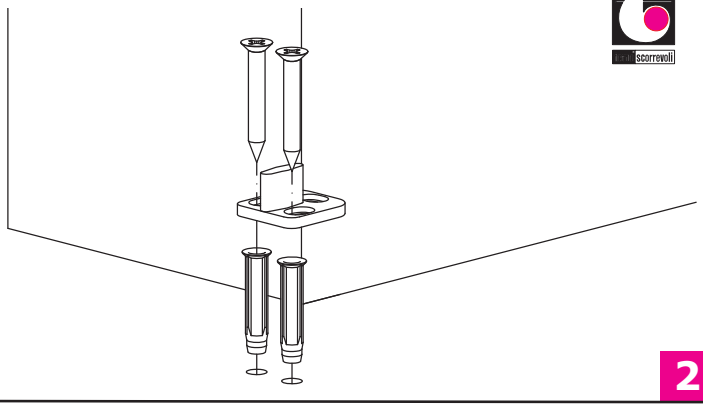

2

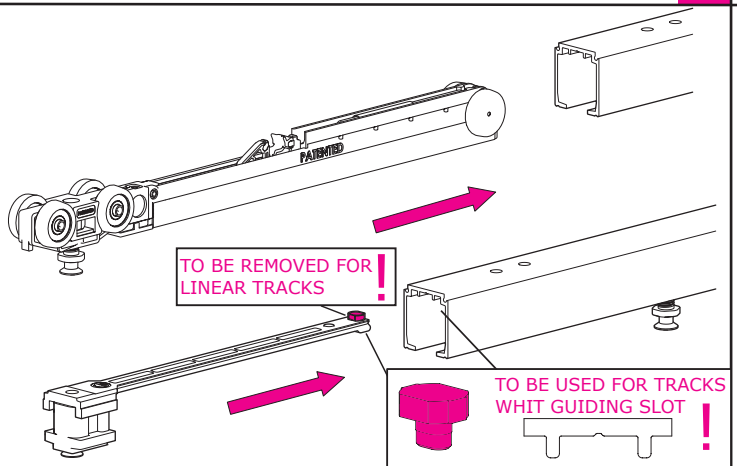

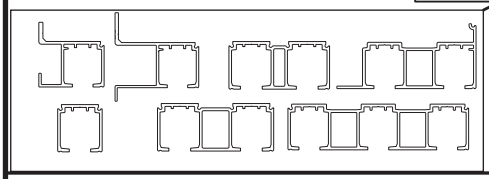

3

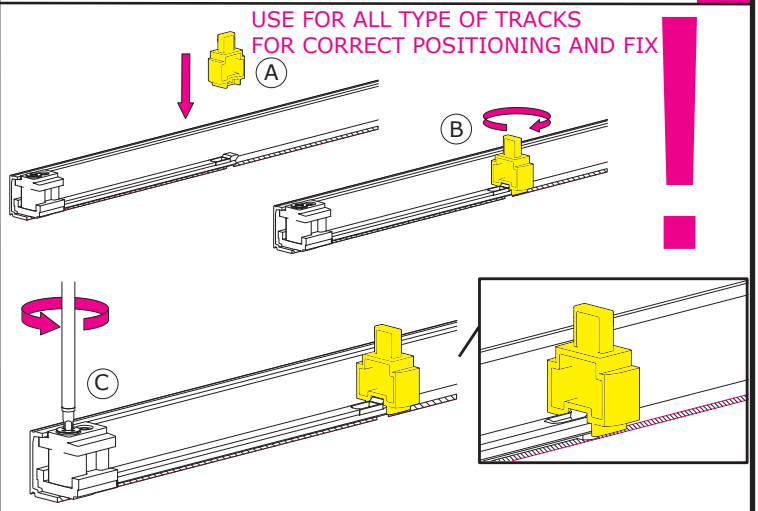

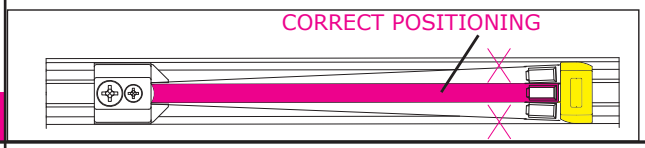

4

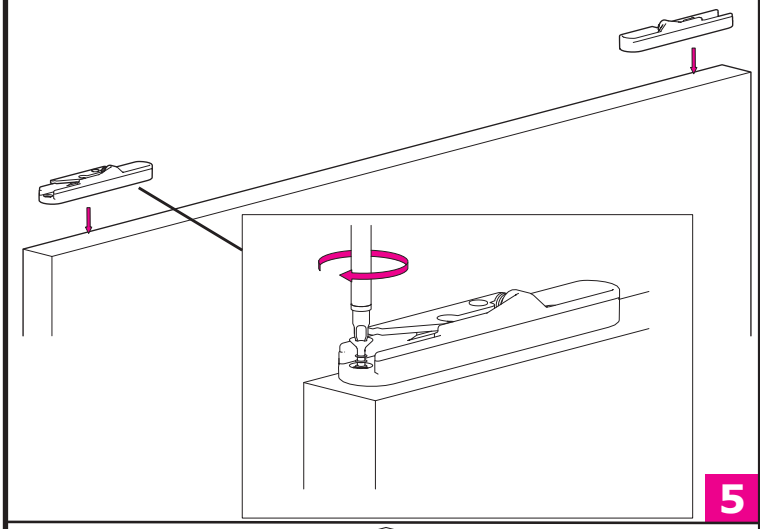

5

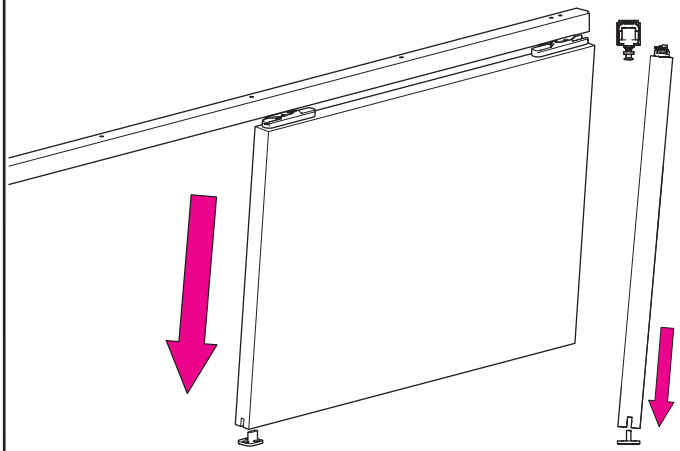

6

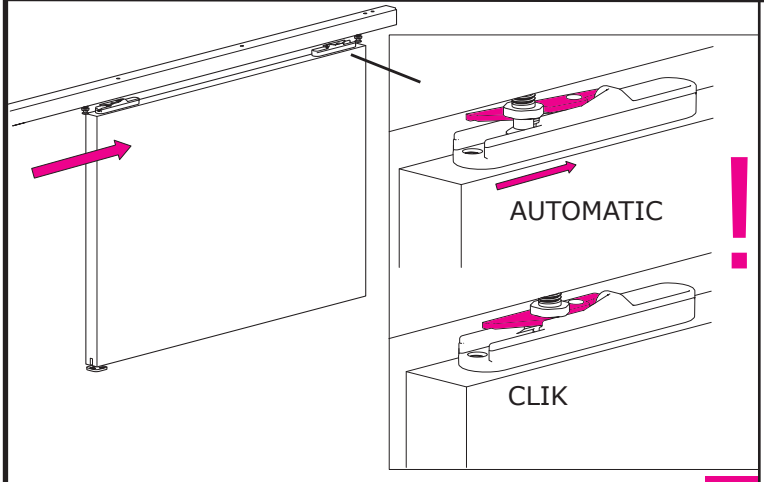

7

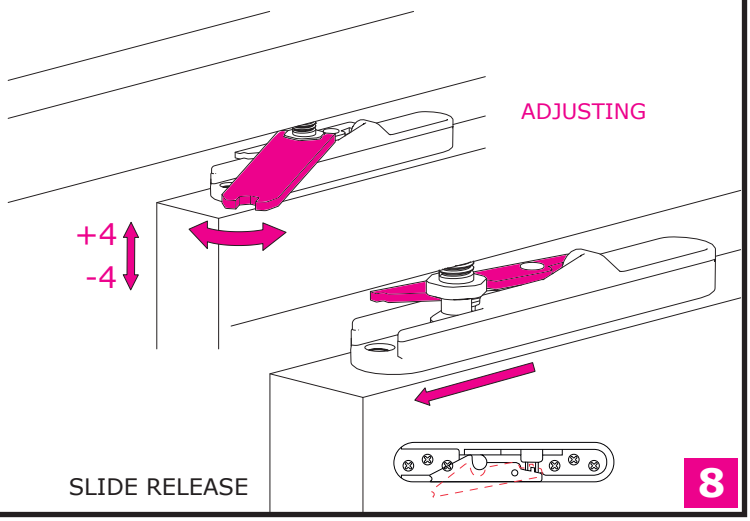

8

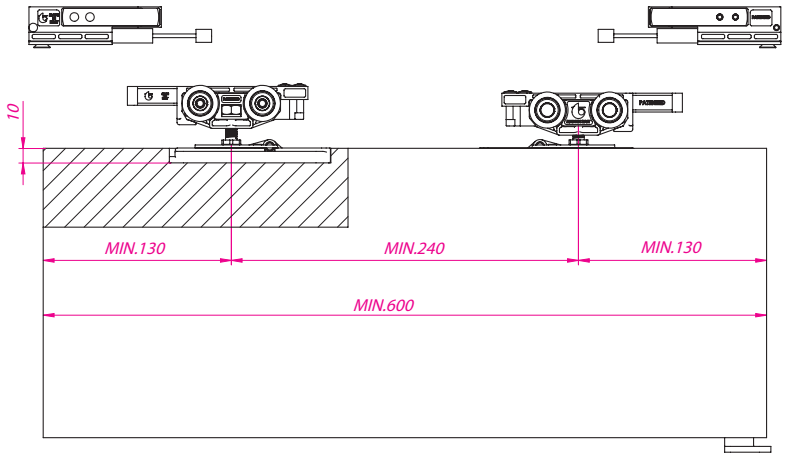

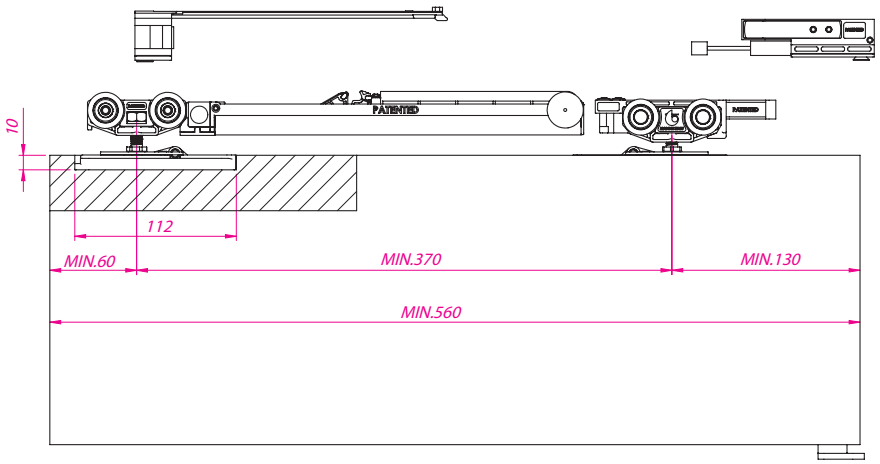

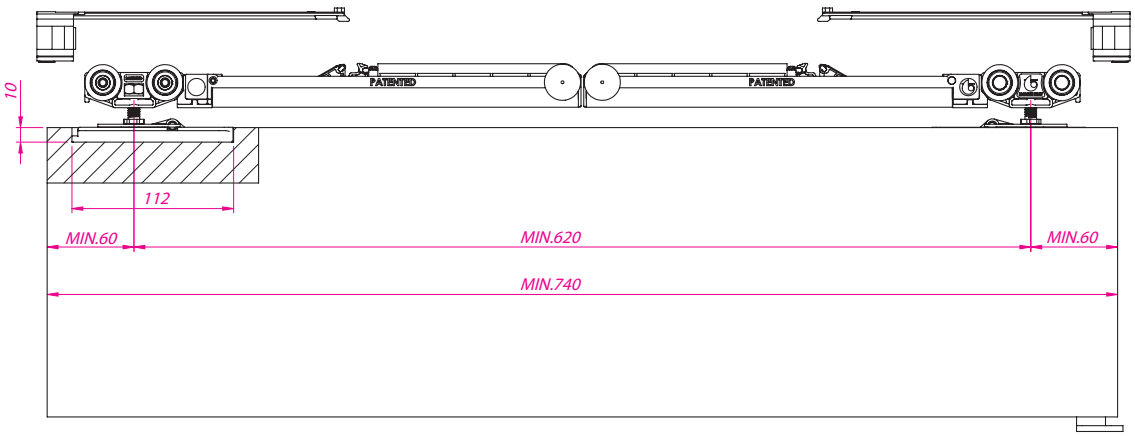

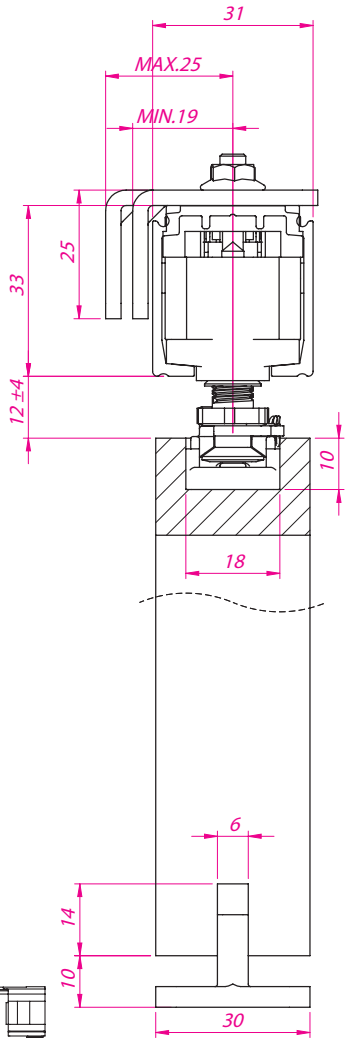

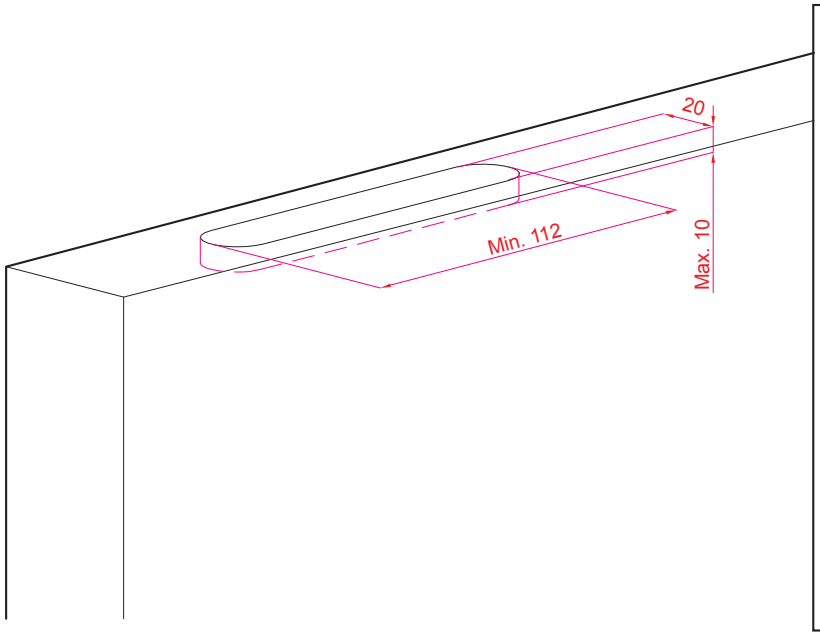

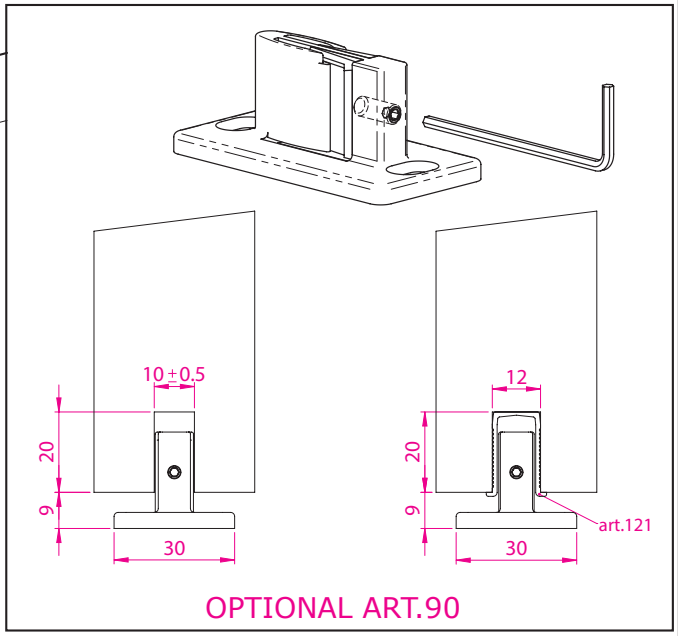

OPTIONAL ART.90