KB320,1,2,5,7,8
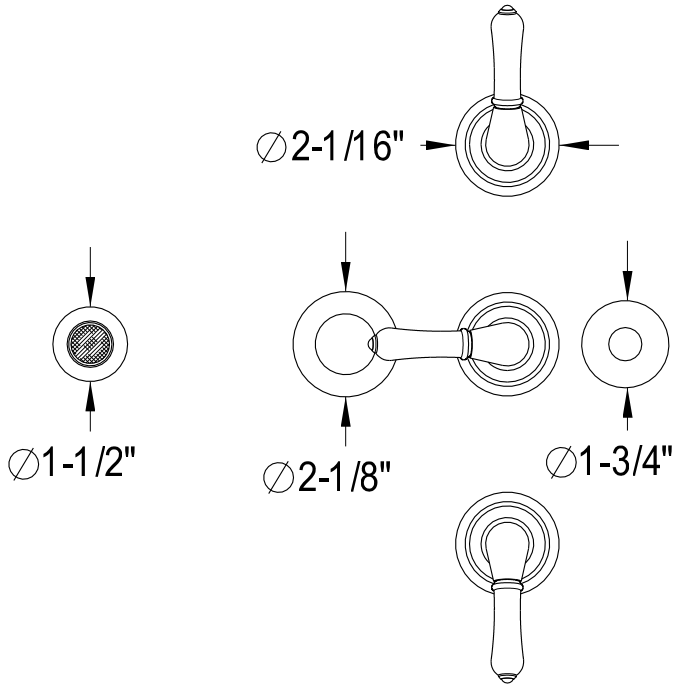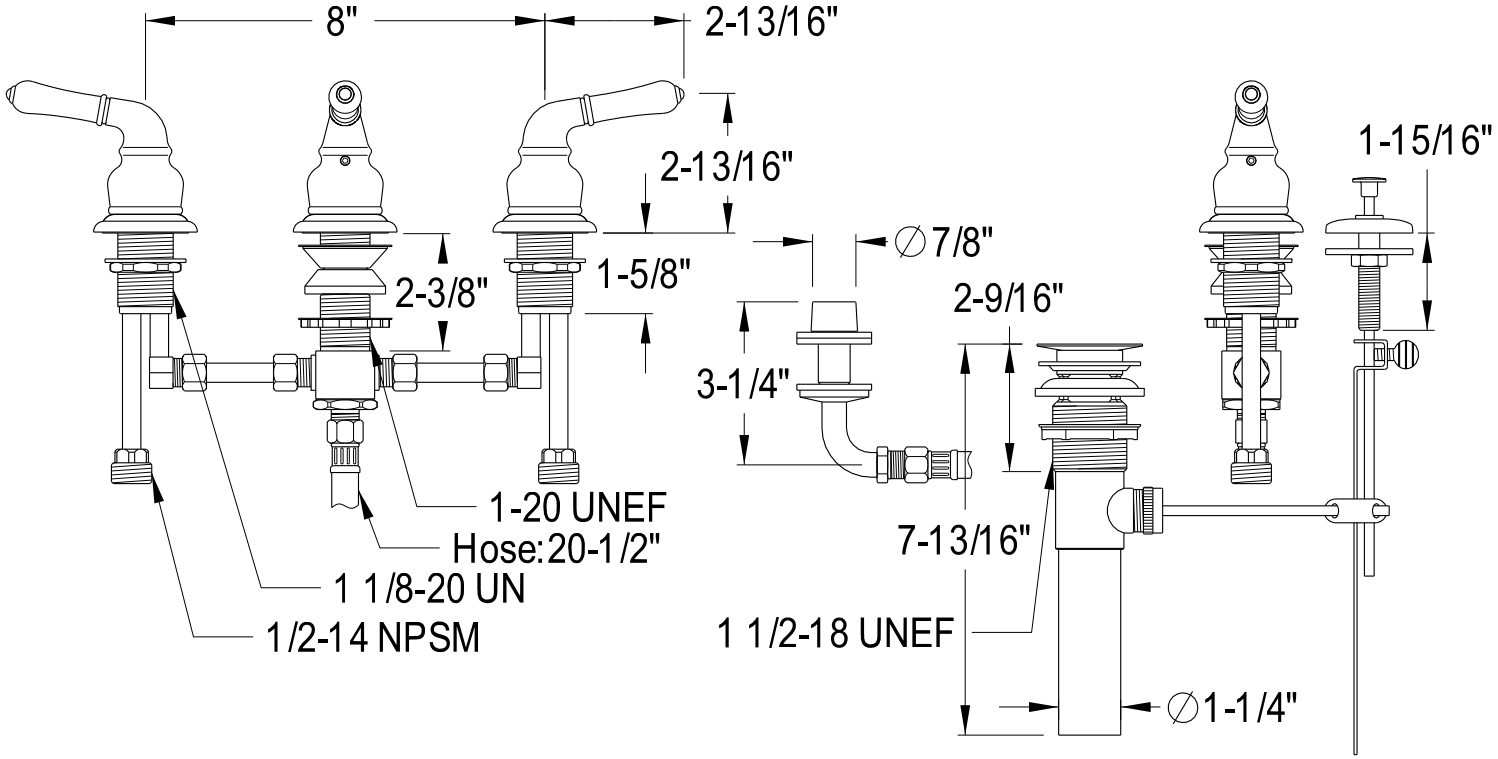
Three Handles Bidet Faucet With Brass Pop-Up