119304, 119308
(ROUND BARREL HINGE - RH-IN/LH-OUT)

TOP HINGE

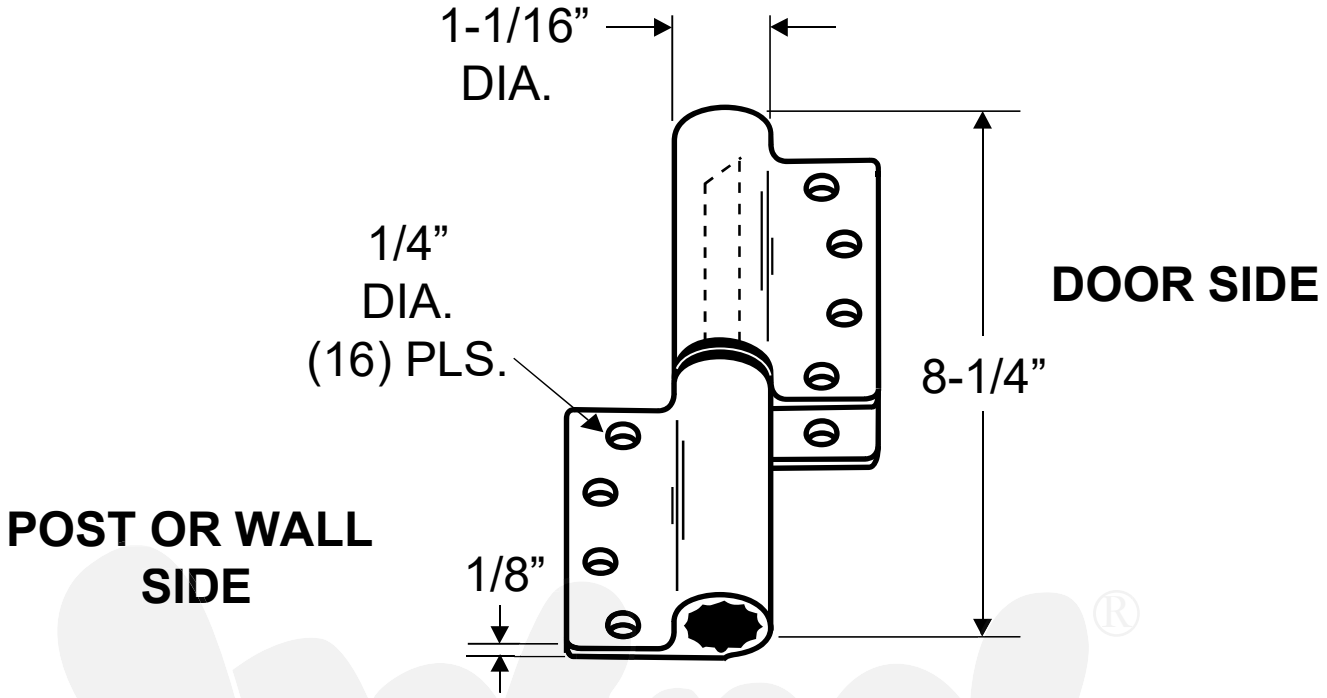

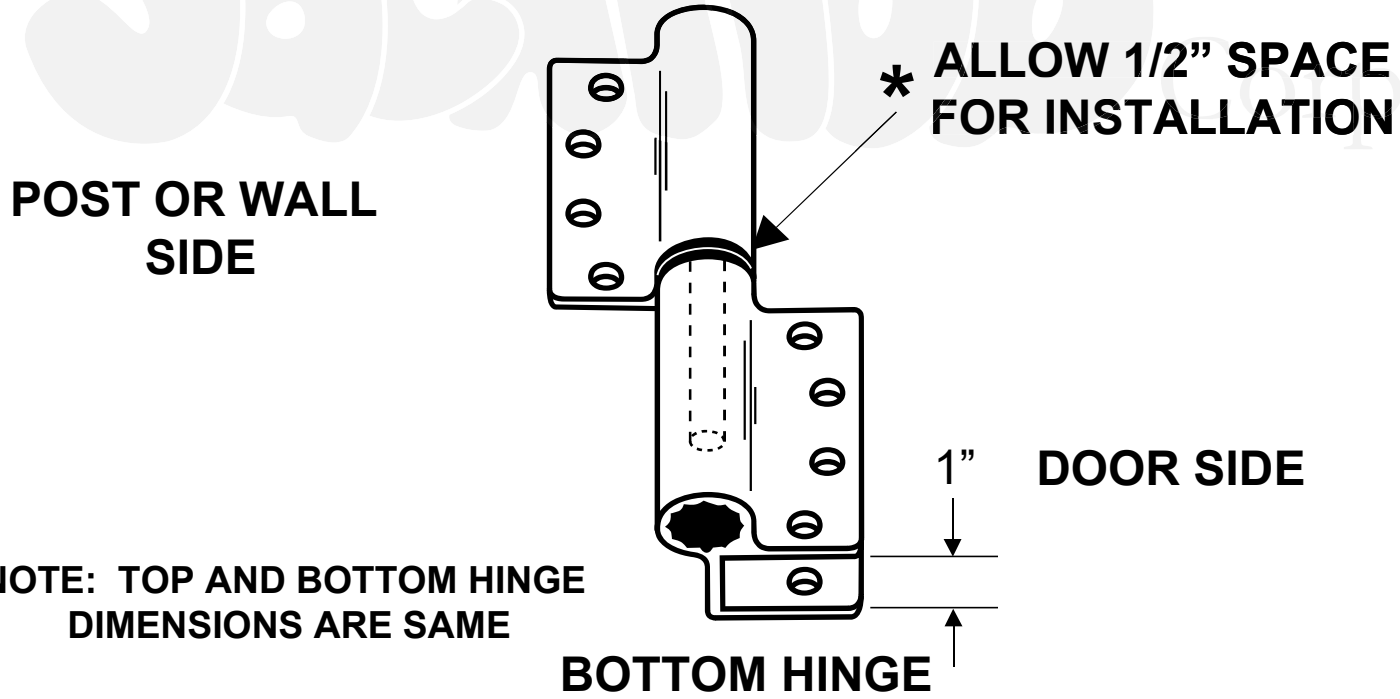

NOTE: TOP AND BOTTOM HINGE DIMENSIONS ARE SAME

BOTTOM HINGE

Copyright - 2024 Jacknob Corp. All rights reserved
All dimensions shown are approximate. Do not pre-drill or fabricate based on dimensions shown.
The manufacturer reserves the right to, and may from time to time, make changes in dimensions and designs.