1840, 1843
(WALL BRACKET - ONE EAR 1-1/4”””)

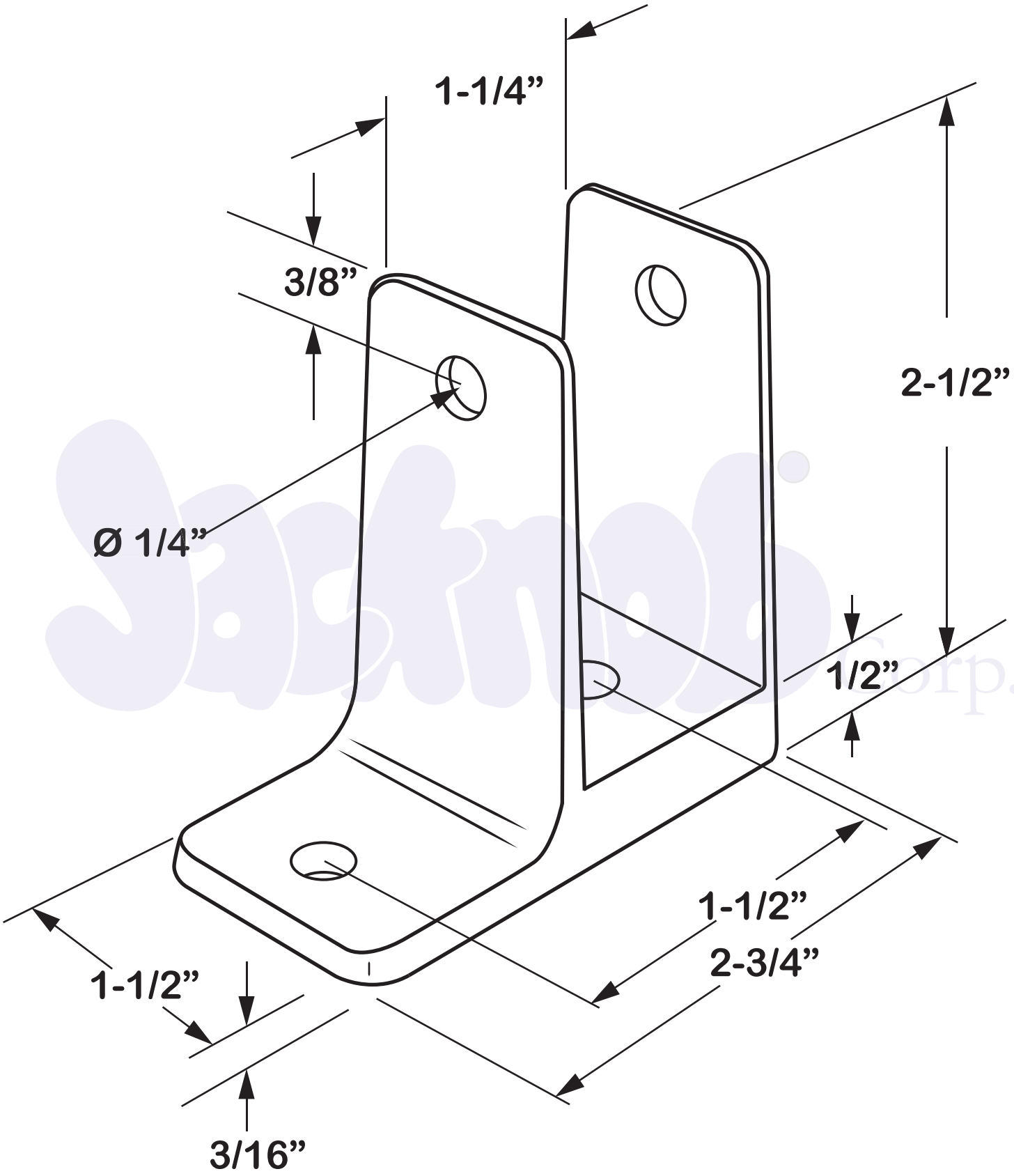

Copyright - 2023 Jacknob Corp. All rights reserved
All dimensions shown are approximate. Do not pre-drill or fabricate based on dimensions shown.
The manufacturer reserves the right to, and may from time to time, make changes in dimensions and designs.