# 603910, 603913
# (PIVOT HINGE - TOP 1-1/4” & SCREW PACK)

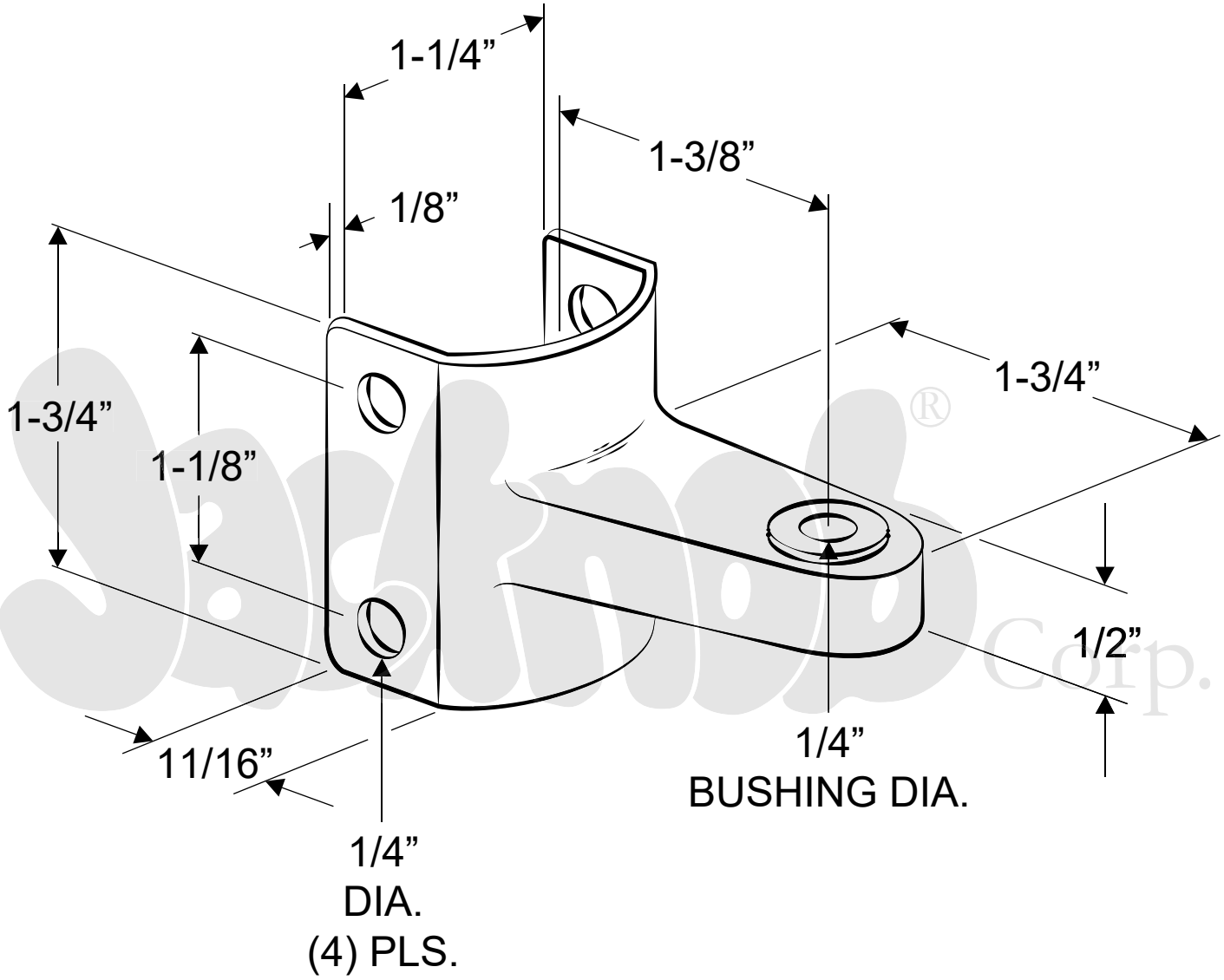


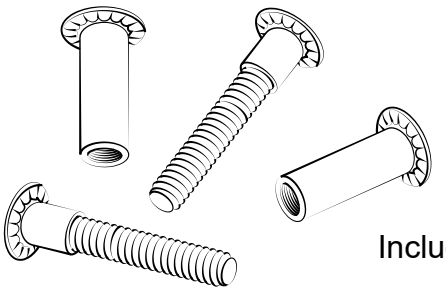

Includes Fasteners

Copyright - 2019 Jacknob Corp. all rights reserved
All dimensions shown are approximate. Do not predrill or fabricate based on dimensions shown.
The manufacturer reserves the right to, and may from time to time, make changes in dimensions and designs.