23 July 2026

Architectural Railing Division
C.R.Laurence Co., Inc.
2503 E Vernon Ave.
Los Angeles, CA 90058

SUBJ: GRS – GLASS RAIL SYSTEM –
WET GLAZED OR TAPER-LOC® SYSTEM DRY-GLAZED
BASE SHOES

The GRS Glass Rail System utilizes an aluminum extruded base shoe to anchor and support structural glass balustrades which support a variety of top rails and grab rails to construct guards and dividers. The glass may be installed in the base shoe using either wet glazing cement or the Taper-Loc® System Dry-Glaze as detailed in this report. The system is intended for interior and exterior weather exposed applications and is suitable for use in most natural environments. The GRS may be used for residential, commercial and industrial applications except for vehicle impacts. The GRS is designed for the following:

On Cap/Top/Grab Rail:
Concentrated load = 200 lbs any direction, any location
Uniform load = 50 plf, any direction perpendicular to rail

On In-fill Panels:
Concentrated load = 50# on one sf.
Distributed load = 25 psf on area of in-fill, including spaces
Wind load = As stated for the application and components (ASD level)

When properly specified and installed the GRS system will meet all applicable requirements of the 2020 and 2024 *International Building Code* and state codes adopted from them, 2022 *California Building Code*, *Florida Building Code*, and *2020* and *2024 International Residential Code*. The GRS System complies with ASTM E 2358-24 *Standard Specification for the Performance of Glass in Permanent Glass Railing Systems, Guards, and Balustrades*. Aluminum components are designed in accordance with the *2020 Aluminum Design Manual*. Stainless steel components are designed in accordance with SEI/ASCE 8-22 *Specification for the Design of Cold-Formed Stainless Steel Structural Members or AISC 370 Specification* for *Structural Stainless Steel.* Wood components are designed in accordance with the *National Design Specification for Wood Construction*. Glass lights are designed in accordance with AAMA CW 12-84 *Structural Properties of Glass*. When constructed as recommended the guards will meet the testing requirements of ICC AC 439 *Acceptance Criteria for Glass Railing and Balustrade System*, ASTM E-2353-16 *Standard Test Methods for Performance of Glass in Permanent Glass Railing Systems, Guards and Balustrades*. This report is in support of the the approval of the system in ESR-3269.

EDWARD C. ROBISON, PE, SE
10012 Creviston Dr NW
Gig Harbor, WA 98329
253-858-0855/Fax 253-858-0856 elrobison@narrows.com

This report demonstrates the structural adequacy of the various base shoe options, mounting options and three monolithic tempered glass options. For a complete code compliant installation an appropriate cap/top rail or grab rail shall be installed, refer to the Glass Rail System Cap Rails and Grab Rails report for design information on the cap rails and grab rails.

In accordance with IBC 1607.9.1 guard live loads are not to be combined with other transient loads such as wind loads. Wind loads, seismic loads and live loads may be considered separately and independently. Dead loads are to be considered when acting cumulatively with a transient load condition. For installations covered in this report dead load effects are negligible and are typically ignored.

CONTENTS:

Item	Page
Signature Page	3
Typical Installations	4 - 9
Taper-Loc® System Typ Install	10
Load Cases	11
Wind Loading	12
Glass Strength	13 – 17
Taper-Loc® Dry Glaze System	18 - 21
Base shoe B5S	22 - 28
Base shoe B5L	29 - 32
Base shoe B5T	32
Base Shoe 8B Series Square Cored	33
Base Shoe B6N & 8B58	34 - 36
Base shoe B7S & 8B34	37 - 40
Drain Blocks	41 - 44
Weld Blocks	44
Concrete Anchor adjustments	44
Surface Mounting to Wood	45
Aluminum Angle bracket for mounting to wood.	46 - 47
Steel Angle bracket for mounting to wood.	48
Surface mounting to wood -interior only	49
Installation on Stairs	50
Limitations of this report	50

Edward C. Robison

Digitally signed by Edward C. Robison
Date: 2026.07.23 12:09:50 -07'00'

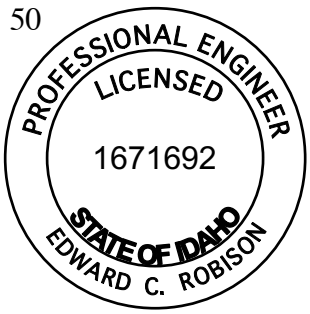



EDWARD C. ROBISON, PE, SE
10012 Creviston Dr NW
Gig Harbor, WA 98329
253-858-0855/Fax 253-858-0856 elrobison@narrows.com

Signature Page:

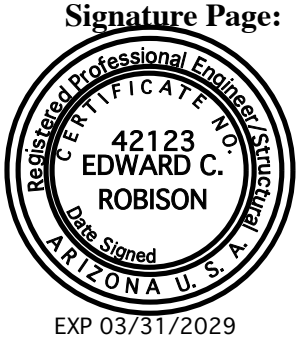

EXP 03/31/2029



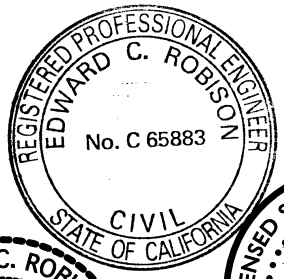



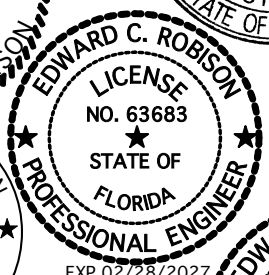

EXP 02/28/2027

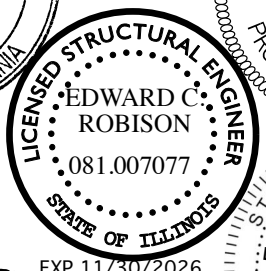

EXP 11/30/2026



Professional Certification. I hereby certify that these documents were prepared or approved by me, and that I am a duly licensed professional engineer under the laws of the State of Maryland, License No. 52500, Expiration Date: 04/09/2028

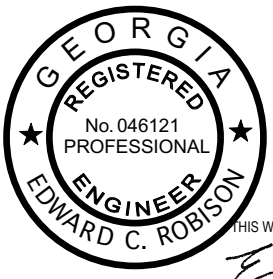

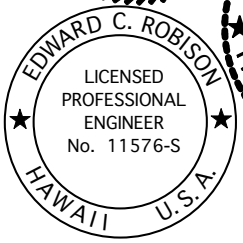

THIS WORK WAS PREPARED BY ME OR UNDER MY SUPERVISION

Signature Expiration Date of the License 04/30/2028

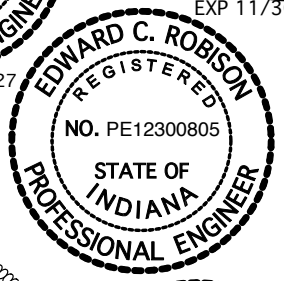

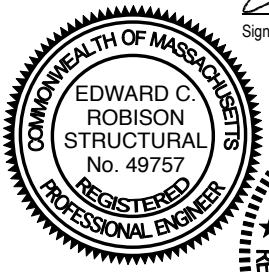

EXP 06/30/2028

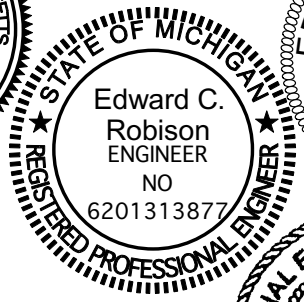

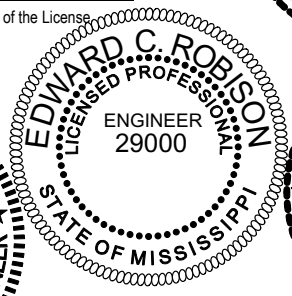

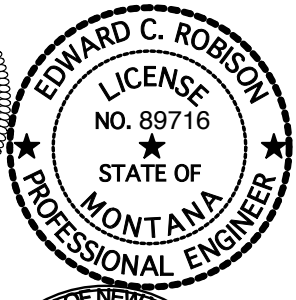

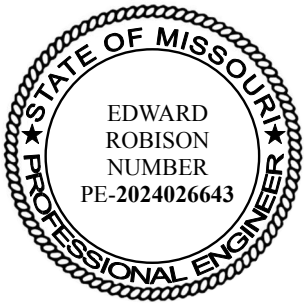

STATE OF MINNESOTA
I hereby certify that this plan, specification. or report was prepared by me or under my direct supervision and that I am a duly Licensed Professional Engineer under the laws of the State of Minnesota.
Signature: Typed or printed name: Edward C. Robison
Date Lic. No. 58604

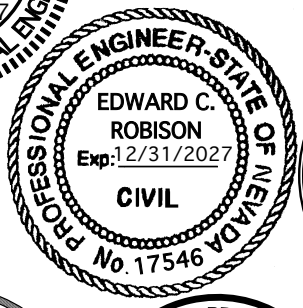

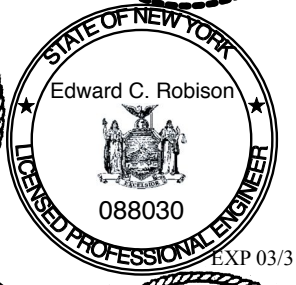

EXP 03/31/2027

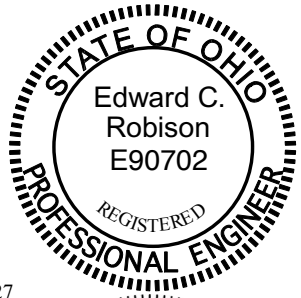

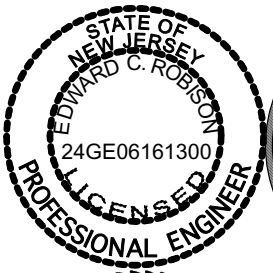



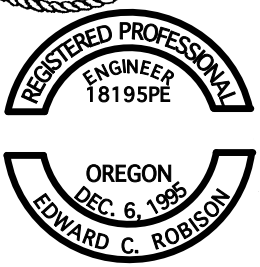

EXP 12/31/2026

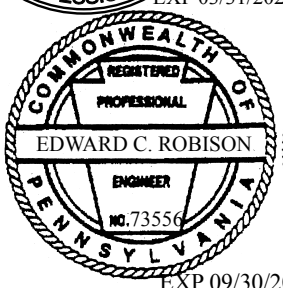

EXP 09/30/2027

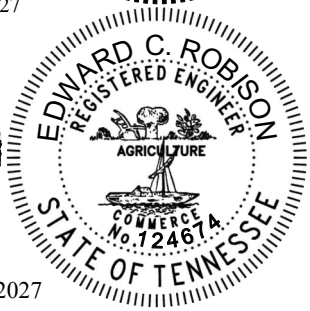

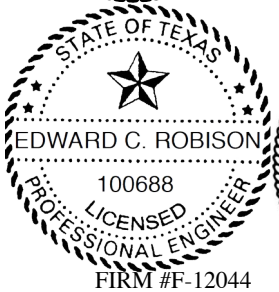

FIRM #F-12044
EXP 12/31/2026

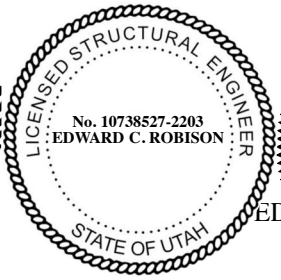

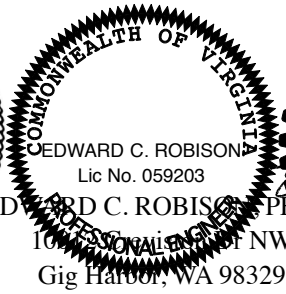

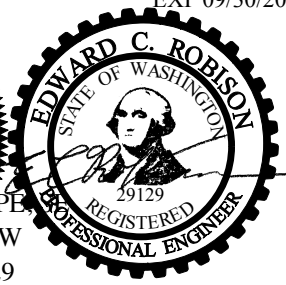

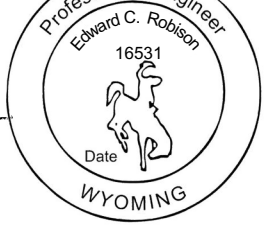

EDWARD C. ROBISON, PE
10[illegible] NW
Gig Harbor, WA 98329
253-858-0855/Fax 253-858-0856 elrobison@narrows.com

Typical Installations:

Glass Taper-Loc® System or wet-glazed into base shoe. An appropriate top rail or grab rail shall be used. Residential, Commercial and Industrial Applications:

ALL WIND LOADS IN THIS REPORT ARE BASED ON ASD WIND PRESSURES.

SURFACE MOUNTED:

Surface mounted to steel with ½" cap screws @ 12" o.c.: [A]

1/2" cap screw to steel	36" Height	42" Height
Base Shoe	Allowable wind load*	
B5S, B5T, 8B	75.3 psf	55.3 psf
B5L	67.7 psf	49.8 psf
B6N & 8B58	78.9 psf	58.0 psf
B7S & 8B34	82.8 psf	60.9 psf

Surface mounted to steel with ½" cap screws @ 6" o.c.: [A]

1/2" cap screw to steel	36" Height	42" Height
Base Shoe	Allowable wind load*	
B5S, B5T, 8B	150.0 psf	110.2 psf
B5L	134.5 psf	98.8 psf
B6N & 8B58	157.2 psf	115.5 psf
B7S & 8B34	165.1 psf	121.3 psf

*Allowable wind load may be limited by glass strength.

For anchorage to concrete Surface Mounted:

3 3/8" diameter x 4" Hilti HUS-EZ (KH-EZ) in accordance with ESR-3027 or Hilti HSL-4 M8 x 3-3/4" anchor in accordance with ESR-4386. f'c = 3,000 psi[B]
embed depth = 2.5" effective depth

Concrete anchors ≥ 3.75" edge distance [ABC]

Anchor spacing to concrete 12" O.C.

Total Guard Height AFF	36"	42"
Base Shoe	Allowable wind load	Allowable wind load
B5S, B5T, 8B	42.7 psf	31.4 psf
B5L	39.0 psf	28.6 psf
B6N & 8B58	45.6 psf	33.5 psf
B7S & 8B34	47.9 psf	35.2 psf

Anchor spacing to concrete 6" O.C. [ABC]

Total Guard Height AFF	36"	42"
B5S, B5T, 8B	68.6 psf	50.4 psf
B5L	61.5 psf	45.2 psf
B6N & 8B58	73.2 psf	53.8 psf
B7S & 8B34	75.7 psf	55.6 psf

EDWARD C. ROBISON, PE, SE
10012 Creviston Dr NW
Gig Harbor, WA 98329
253-858-0855/Fax 253-858-0856 elrobison@narrows.com

Surface Mounted Base Shoes:

Concrete anchors ≥ 2.35" edge distance [ABC]

Anchor spacing to concrete 12" O.C.

Total Guard Height AFF	36"	42"
Base Shoe	Allowable wind load	Allowable wind load
B5S, B5T, 8B	35.5 psf	26.1 psf
B5L (3.047" min edge dist)	35.4 psf	26.0 psf[a]
B6N & 8B58	37.2 psf	27.3 psf
B7S & 8B34	39.1 psf	28.7 psf

[a]Doesn't meet 50 plf live load on top rail

Concrete anchors ≥ 1.75" edge distance [ABC]

Anchor spacing to concrete 6" O.C.

Total Guard Height AFF	36"	42"
B5S, B5T, 8B	50.8 psf	37.3 psf
B5L	45.6 psf	33.5 psf
B6N & 8B58	53.3 psf	53.3 psf
B7S & 8B34	56.0 psf	41.1 psf
B7S & 8B34 2.35" edge dist.	61.9 psf	45.5 psf

[A] Linear interpolation between guard heights, anchor spacing and edge distances is permitted.

[B]Adjustment for concrete strength other than $f'_c = 3{,}000$ psi

$$W' = \frac{W*\sqrt{X}}{\sqrt{3{,}000}}$$

[C]Adjustment for sand light-weight concrete:

$$W' = 0.6*W$$

SURFACE MOUNTED WITH DRAIN BLOCKS ON CONCRETE

Concrete anchors ≥ 3.75" edge distance [ABC]

Anchor spacing to concrete 12" O.C.

Total Guard Height AFF	36"	42"
Base Shoe	Allowable wind load	Allowable wind load
B5S, B5T, 8B	41.2 psf	30.2 psf
B5L	37.0 psf	27.2 psf
B6N & 8B58	44.0 psf	32.3 psf
B7S & 8B34	50.5 psf	37.1 psf

ALL WIND LOADS IN THIS REPORT ARE BASED ON ASD WIND PRESSURES.

EDWARD C. ROBISON, PE, SE
10012 Creviston Dr NW
Gig Harbor, WA 98329
253-858-0855/Fax 253-858-0856 elrobison@narrows.com

SURFACE MOUNTED WITH DRAIN BLOCKS ON CONCRETE

Anchor spacing to concrete 6" O.C. [ABC]

Total Guard Height AFF	36"	42"
B5S, B5T, 8B	66.9 psf	49.2 psf
B5L	60.2 psf	44.2 psf
B6N & 8B58	71.2 psf	52.3 psf
B7S & 8B34	74.6 psf	54.8 psf

Concrete anchors ≥ 2.35" edge distance [ABC]

Anchor spacing to concrete 12" O.C.

Total Guard Height AFF	36"	42"
Base Shoe	Allowable wind load	Allowable wind load
B5S, B5T, 8B	34.0 psf	25.0 psf[a]
B5L (3.047" min edge dist)	30.6 psf	26.9 psf[a]
B6N & 8B58	36.2 psf	26.6 psf
B7S & 8B34	41.6 psf	30.5 psf

[a]Doesn't meet 50 plf live load on top rail add extra anchor per 10' length

Concrete anchors ≥ 2.35" edge distance [ABC]

Anchor spacing to concrete 6" O.C.

Total Guard Height 42" above finish floor.

B5S, B5T, 8B	55.0 psf	40.4 psf
B5L	49.5 psf	36.4 psf
B6N & 8B58	58.4 psf	42.9 psf
B7S & 8B34	61.2 psf	45.0 psf

[A] Linear interpolation between guard heights, anchor spacing and edge distances is permitted.

[B]Adjustment for concrete strength other than $f'_c = 3{,}000$ psi

$$W' = \frac{W*\sqrt{X}}{\sqrt{3{,}000}}$$

[C]Adjustment for sand light-weight concrete:

$$W' = 0.6*W$$

ALL WIND LOADS IN THIS REPORT ARE BASED ON ASD WIND PRESSURES.

EDWARD C. ROBISON, PE, SE
10012 Creviston Dr NW
Gig Harbor, WA 98329
253-858-0855/Fax 253-858-0856 elrobison@narrows.com

FASCIA (SIDE) MOUNTED BASE SHOE

Fascia mounted to steel with ½" cap screws @ 12" o.c.:

1/2" cap screw to steel	36" Height	42" Height
Base Shoe	Allowable wind load*	
B5S, 8B	68.7 psf	51.2 psf
B6N & 8B58	68.7 psf	51.2 psf
B7S & 8B34	68.7 psf	51.2 psf

Fascia mounted to steel with ½" cap screws @ 6" o.c.:

1/2" cap screw to steel	36" Height	42" Height
Base Shoe	Allowable wind load*	
B5S, 8B	138.2 psf	103.0 psf
B6N & 8B58	138.2 psf	103.0 psf
B7S & 8B34	138.2 psf	103.0 psf

*Allowable wind load may be limited by glass strength.
Height is from top of base shoe to top of rail.

For anchorage to concrete:

3/8" diameter x 4" Hilti HUS-EZ (KH-EZ) in accordance with ESR-3027 or Hilti HSL-4 M8 x 3-3/4" anchor in accordance with ESR-4386. f'c = 3,000 psi
embed depth = 2.5" effective depth

Fascia Mounted

Concrete anchors edge distance ≥ ½ base shoe height

Anchor spacing to concrete	12" O.C.	
Total Guard Height AFF	36"	42"
Base Shoe	Allowable wind load	Allowable wind load
B5S, 8B	49.7 psf	37.0 psf
B6N & 8B58	49.7 psf	37.0 psf
B7S & 8B34	49.7 psf	37.0 psf

Anchor spacing to concrete	6" O.C.	
Total Guard Height 42" above finish floor.		
B5S, 8B	77.1 psf	57.5 psf
B6N & 8B58	77.1 psf	57.5 psf
B7S & 8B34	77.1 psf	57.5 psf

Height is from top of base shoe to top of rail.

ALL WIND LOADS IN THIS REPORT ARE BASED ON ASD WIND PRESSURES.

EDWARD C. ROBISON, PE, SE
10012 Creviston Dr NW
Gig Harbor, WA 98329
253-858-0855/Fax 253-858-0856 elrobison@narrows.com

Fascia Mounted

To wood with 3/8" lag screws with 3.53" minimum embedment to wood G ≥ 0.49

Anchor spacing 12" O.C. Interior or Dry locations mc ≤ 19%

Total Guard Height AFF	36"	42"
Base Shoe	Allowable wind load	Allowable wind load
B5S, 8B	48.1 psf	36.2 psf
B5L	41.3 psf	30.7 psf
B6N & 8B58	48.1 psf	36.2 psf
B7S & 8B34	48.1 psf	36.2 psf

Anchor spacing 6" O.C.

Total Guard Height AFF	36"	42"
B5S, 8B	92.4 psf	68.8 psf
B5L	77.6 psf	57.7 psf
B6N & 8B58	92.4 psf	68.8 psf
B7S & 8B34	92.4 psf	68.8 psf

Anchor spacing 12" O.C. Exterior or wet locations where mc ≥ 19%

Total Guard Height AFF	36"	42"
Base Shoe	Allowable wind load	Allowable wind load
B5S, 8B	34.4 psf	25.6 psf
B5L	28.8 psf	21.4 psf
B6N & 8B58	34.4 psf	25.6 psf
B7S & 8B34	34.4 psf	25.6 psf

Anchor spacing to 6" O.C.

Total Guard Height AFF	36"	42"
B5S, 8B	66.7 psf	49.7 psf
B5L	56.6 psf	42.0 psf
B6N & 8B58	66.7 psf	49.7 psf
B7S & 8B34	66.7 psf	49.7 psf

Height is from top of base shoe to top of rail.

ALL WIND LOADS IN THIS REPORT ARE BASED ON ASD WIND PRESSURES.

EDWARD C. ROBISON, PE, SE
10012 Creviston Dr NW
Gig Harbor, WA 98329
253-858-0855/Fax 253-858-0856 elrobison@narrows.com

Surface mounted to wood
Refer to Surface Mounting Base Shoes to Wood Decks section of this report, page 55.

Embedded base shoe:
All base shoes: Glass strength controls for all cases when base shoes are properly embedded into concrete.

OTHER GLASS HEIGHTS:
The allowable wind loads may be adjusted for other light heights by:

$$W' = \frac{W_{42} * 42^2}{H_g^2}$$

Where H_g = total guard height measured from bottom of base shoe to top of cap rail in inches.

ALLOWABLE LOADS ON GLASS

Glass thickness	Allowable wind load 36" Guard Height	42" Guard Height
1/2"	71.1 psf	52.2 psf
5/8"	114.4 psf	84.1 psf
3/4"	167.1 psf	122.8 psf

MINIMUM RECOMMENDED GLASS LIGHT WIDTH

Glass thickness	36" Guard Height	42" Guard Height
1/2"	2'- 6"	2'- 10.5"
5/8"	1'- 7"	1'- 10"
3/4"	1'- 0"	1'- 3"

Glass thickness shall be selected as required to achieve the required wind load.

For guard installations using monolithic tempered glass a cap/top rail or grab rail shall be installed supported by a minimum of 3 glass lights or otherwise supported so as to remain in place in the event of any single glass light failure.

Linear interpolation of all tables is permitted.

ALL WIND LOADS IN THIS REPORT ARE BASED ON ASD WIND PRESSURES. If using wind loads calculated as ultimate or strength level (basic wind speed) the wind loads must be adjusted by multiplying by 0.6 per ASCE/SEI 7 section 2.4 load combinations and IBC 1605.3.1.

EDWARD C. ROBISON, PE, SE
10012 Creviston Dr NW
Gig Harbor, WA 98329
253-858-0855/Fax 253-858-0856 elrobison@narrows.com

Taper-Loc® System Typical Installation

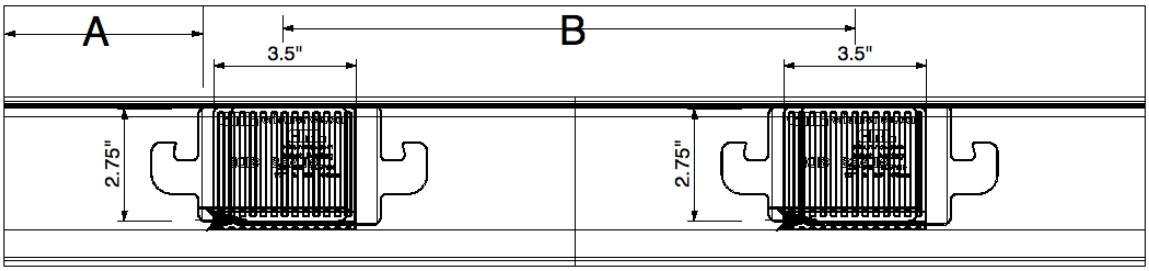

For 1/2" Fully Tempered Glass maximum glass light height = 42":
Edge Distance: 2" ≤ A ≤ 8 5/8"; 51mm ≤ A ≤ 219mm
Center to center spacing: 7" ≤ B ≤ 14": 178mm ≤ B ≤ 356mm

Panel Width/Required quantity of Taper-Loc® Plates:
6" to 14" (152 to 356mm) 1 TL Plate
14" to 28" (356 to 711 mm) 2 TL Plates
28" to 42" (711 to 1,067 mm) 3 TL Plates
42" to 56" (1,067 to 1,422 mm) 4 TL Plates
56" to 70" (1,422 to 1,778 mm) 5 TL Plates
70" to 84" (1,778 to 2,134 mm) 6 TL Plates
84" to 96" (2,134 to 2,438 mm) 7 TL Plates

Minimum Glass Light Width = 6" when top rail/guardrail is continuous, welded corners or attached to additional supports at rail ends.

NOTES:
1. For glass light heights over 42" A_{max} and B_{max} shall be reduced proportionally.
   A_{max} = 8 5/8*(42/h)
   B_{max} = 14*(42/h)

2. For glass light heights under 42" A_{max} and B_{max} shall not be increased.

3. A_{min} and B_{min} are for ease of installation and can be further reduced as long as proper installation is achieved.

4. For glass thicknesses greater than 1/2" A_{max} and B_{max} may be increased as follows:
   5/8" Glass
      Edge Distance: 2" ≤ A ≤ 13.5"
      Center to center spacing: 7" ≤ B ≤ 21"
   3/4" Glass
      Edge Distance: 2" ≤ A ≤ 19"
      Center to center spacing: 7" ≤ B ≤ 31"

EDWARD C. ROBISON, PE, SE
10012 Creviston Dr NW
Gig Harbor, WA 98329
253-858-0855/Fax 253-858-0856 elrobison@narrows.com

LOAD CASES:

Dead load = 6.5 psf for glass
1.8 plf top rail
8.6 plf for base shoe

Loading:
Horizontal load to base shoe
25 psf*H or W*H
Balustrade moments
$M_i = 25\ psf*H^2/2$ or
$M_w = w\ psf*\ H^2/2$

For top rail loads:
$M_c = 200\#*H$
$M_u = 50plf*H$

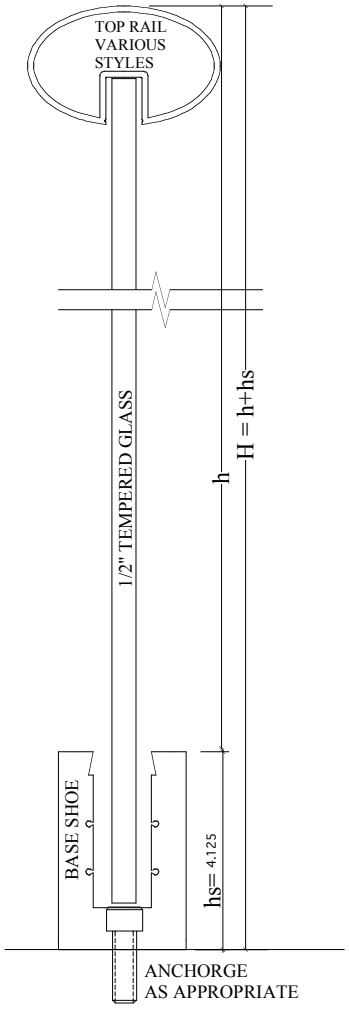

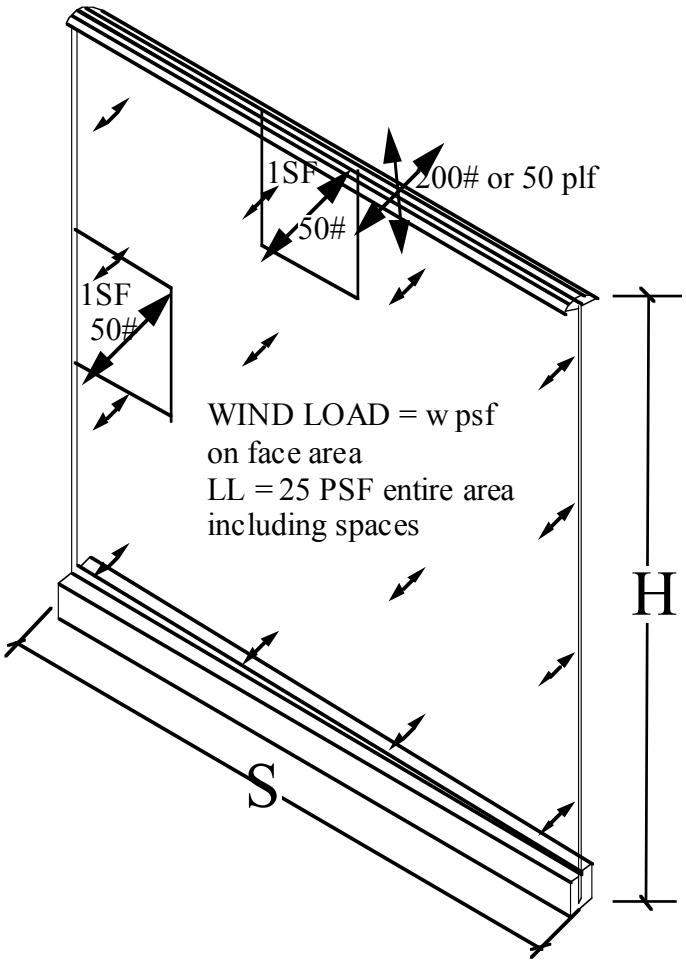

Three options for glass thickness:
1/2" glass, weight = 6.46 psf
5/8" glass, weight = 8.04 psf
3/4" glass, weight = 9.35 psf

EDWARD C. ROBISON, PE, SE
10012 Creviston Dr NW
Gig Harbor, WA 98329
253-858-0855/Fax 253-858-0856 elrobison@narrows.com

WIND LOADING ON FENCES OR GUARDS

For wind load surface area is full area of fence or guard:
Calculated in accordance with ASCE/SEI 7-16 Section 29.4 *Design Wind Loads on Solid Freestanding Walls and Solid Signs*. This section is applicable for free standing building guardrails, wind walls and balcony railings that return to building walls. Section 29.6 *Parapets* may be applicable when the rail is along a roof perimeter. **Wind loads must be determined by a qualified individual for a specific installation.**

$p = q_h(GC_p) = q_zGC_f$ (ASCE 7-10 eq. 29.4-1)
G = 0.85 from (section 26.9.4.)
$C_f = 2.5*0.8*0.6 = 1.2$ (Figure 29.4-1) with reduction for solid and end returns, will vary.
$q_h = 0.00256K_zK_{zt}K_dV^2$ Where:

K_z from (Table 29.3-1) at the height z of the railing centroid and exposure.
$K_d = 0.85$ from (Table 26-6).
K_{zt} From (Figure 26.8-1) for the site topography, typically 1.0.
V = Wind speed (mph) 3 second gust, (Figure 26.5-1A) or per local authority.

Simplifying - Assuming $1.3 \le C_f \le 2.6$ (Typical limits for fence or guard with returns.)
Adjustment for full height solid: f = 1.8-1 = 0.8
Adjustment to Allowable Stress Design: $w_{asd} = 0.6w_{strength}$

For $C_f = 1.3$: $F = q_h*0.85*1.3*0.8*0.6 = 0.53\ q_h$
For $C_f = 2.6$: $F = q_h*0.85*2.6*0.8*0.6 = 1.06\ q_h$

Wind Load will vary along length of fence in accordance with ASCE 7-10 Figure 29.4-1.
Typical exposure factors for K_z with height 0 to 15' above grade:

Exposure	B	C	D
K_z =	0.70	0.85	1.03

MINIMUM WIND LOAD TO BE USED IS 10 PSF.
Centroid of wind load acts at 0.55h on the fence.

$w_{asd} = 0.53*0.00256*K_z*V^2$ or $w_{asd} = 1.06*0.00256*K_z*V^2$

Table 1	W_{ASD} in psf for C_f = 1.3			W_{ASD} in psf for C_f = 2.6		
Wind speed	Exp B K_z =0.7	Exp C K_z =0.85	Exp D K_z=1.03	Exp B K_z =0.7	Exp C K_z =0.85	Exp D K_z=1.03
100	9.5	11.5	14.0	19.0	23.1	28.0
110	11.5	14.0	16.9	23.0	27.9	33.8
120	13.7	16.6	20.1	27.4	33.2	40.2
130	16.1	19.5	23.6	32.1	39.0	47.2
140	18.6	22.6	27.4	37.2	45.2	54.8
150	21.4	25.9	31.4	42.7	51.9	62.9
160	24.3	29.5	35.8	48.6	59.0	71.6

For other values of C_f multiply wind load for C_f = 1.3 value by $C_f/1.3$
Where guard ends without a return the wind forces may be as much as 1.667 times C_f=2.6 value.

EDWARD C. ROBISON, PE, SE
10012 Creviston Dr NW
Gig Harbor, WA 98329
253-858-0855/Fax 253-858-0856 elrobison@narrows.com

GLASS BALUSTRADE GUARD RAIL

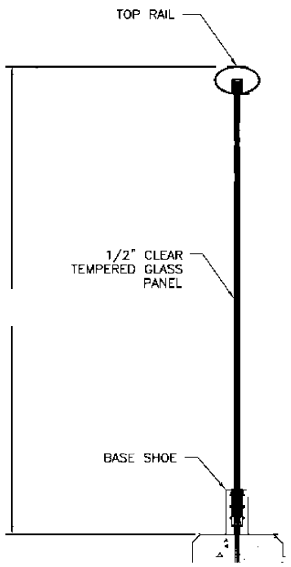

GLASS STRENGTH

All glass is fully tempered glass conforming to the specifications of ANSI Z97.1, ASTM C 1048-18 and CPSC 16 CFR 1201. For fully tempered glass the average Modulus of Rupture F_r is 24,000 psi. The Safety Factor of 4.0 used herein is based on IBC Section 2407 and is applicable to live loads only. Wind load stress may be increased in accordance with IBC 2404.1 and ASTM E1300 to a maximum allowable edge stress of 10,600 psi (9,600 psi recommended for most installations).

Glass lights serve as balusters to support the top rail or grab rail and form the guard infill.

Allowable glass bending stress: 24,000/4 = 6,000 psi. – Tension stress calculated from live loads.

Bending strength of glass for the given thickness:

$$S = \frac{12"*(t)^2}{6} = 2*(t)^2 \text{ in}^3/\text{ft}$$

Use minimum glass thickness.

For 1/2" glass $S = 2*(0.469)^2 = 0.44 \text{ in}^3/\text{ft}$

$M_{alllive} = 6{,}000\text{psi}*0.44 \text{ in}^3/\text{ft} = 2{,}640"\#/\text{ft} = 220'\#$

$M_{allwind} = 9{,}600\text{psi}*0.44 \text{ in}^3/\text{ft} = 4{,}224"\#/\text{ft} = 352'\#$

For continuously supported cantilevered elements basic beam theory for cantilevered beams is used.

$M_u = u*h^2/2$ for uniform load W and height h or

$M_p = P*h$ for concentrated load P and height h,

For wind load centroid acts at 0.55h:

$M_w = w*h^2*0.55$ for uniform load W and height h or

For deflection: t is average glass thickness, $E = 10.4\text{x}10^6$ psi

$\Delta = (1-\nu^2)wh^4/(8Et^3)$; w = uniform load on glass or

$\Delta = (1-\nu^2)uh^3/(3Et^3)$; u = distributed load on top rail or

$\Delta = (1-\nu^2)Ph^3/(3EI)$; P = concentrated load on top rail,

$I = bt^3$ where b is glass width in feet.

ASTM E 2358-24 limits deflection to h/12 (3.5" for 42" guard height). For comfort level it is recommended to limit deflection to 1" for 42" guard height. The IBC has no defined deflection limit. ICC AC 439 applies the 1" deflection limit for most applications.

For glass wet glazed in base shoe stress is uniform across light. For the Taper-Loc® system the stress may be assumed as uniform as demonstrated later in this report.

EDWARD C. ROBISON, PE, SE
10012 Creviston Dr NW
Gig Harbor, WA 98329
253-858-0855/Fax 253-858-0856 elrobison@narrows.com

GLASS PANELS LOADS:
From UBC Table 16-B or IBC 1607.7.1
On hand rail – 200lb concentrated or 50 plf Any direction
Or On panel – 25 psf horizontal load

DETERMINE MAXIMUM PANEL HEIGHT ½" glass:
For 50 plf distributed load:
L = (M/w)= 220#'/50plf = 4.4' = 52-3/4"

Maximum Panel height for 25 psf live load
$L = (220\#'*2/25\ psf)^{1/2} = 4.20' = 50\text{-}3/8"$ (1/2" glass cantilevered)
for 30 psf:
$L = (220\#'*2/30\ psf)^{1/2} = 3.83' = 46"$

Maximum wind load based on glass strength
$w = (352\#')/(0.55h^2)$

Glass light height = 36"
Calculate maximum wind load:
$w = (352\#')/(0.55*3^2) = 71.1$ psf
150 mph exposure D - depends on specific site conditions

Glass light height = 42"
Calculate maximum wind load:
$w = (352\#')/(0.55*3.5^2) = 52.2$ psf
140 mph exposure C or 130 mph exposure D - depends on specific site conditions

Determine maximum glass light height for 150 mph exposure D wind, w= 58.7 psf
$h = \sqrt{(352\#'/(0.55*58.7)} = 3.302' = 39.62"$
Maximum guard total height = 39.62"+ 4" = 43.62" for 58.7 psf.

For 200 lb concentrated load
Worst case is load at end of panel top corner with no top rail:
The load will be initially resisted by a strip = 8t
For 1/2" glass = 4"
The shear will transfer along the glass at a 45° angle from vertical to spread across the panel.
b2 = b1+h*tan45
@ 2" from top
M = 200#*2" = 400#"
S = 0.22 in^3 based on 6" width
f_b = 400#"/0.22 in^3 = 1,818 psi

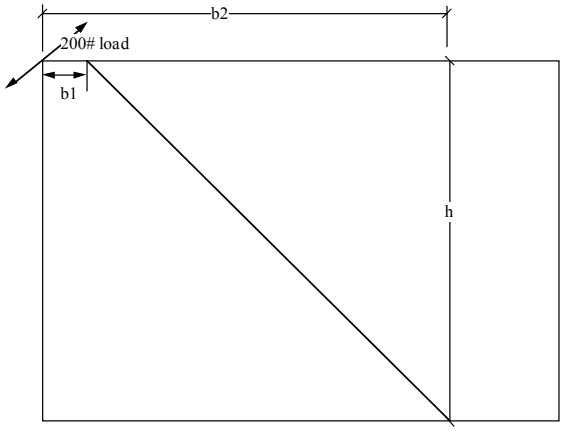

EDWARD C. ROBISON, PE, SE
10012 Creviston Dr NW
Gig Harbor, WA 98329
253-858-0855/Fax 253-858-0856 elrobison@narrows.com

Determine minimum panel width for 42" height (38" glass cantilever height)

M = 200#*38" = 7,600#"

S = 0.44 in^3/ft and F_b = 6,000 psi

l_{min} = (7,600/(6,000*0.44) = 2.88'

Deflection: 42" total height, 38" glass height.

$\Delta = Ph^3/(3Ebt^3) = 200*38"^3/(3*10,400,000*2.88'*0.5^3) = 0.98"$ (200# load min width)

$\Delta = uh^3/(3Et^3) = 50plf*38"^3/(3*10,400,000*0.5^3) = 0.70"$ (50 plf load)

$\Delta = wh^4/(8Et^3) = 50psf/12*38"^4/(8*10,400,000*0.5^3) = 0.84"$ (50 psf wind load)

NOTE: FOR THE TAPER-LOC® SYSTEM INSTALLED WITHOUT WET GLAZING GLASS LOADS TYPICALLY DO NOT NEED TO BE ADJUSTED FOR STRESS CONCENTRATIONS AS DEMONSTRATED LATER IN THIS REPORT.

For 5/8" glass

$S = 2*(0.595)^2 = 0.708$ in^3/ft

$M_{alllive}$ = 6,000psi*0.708 in^3/ft = 4,248#"/ft = 354.0#'

$M_{allwind}$ = 9,600psi*0.708 in^3/ft = 6,797#"/ft = 566.4#'

DETERMINE MAXIMUM PANEL HEIGHT 5/8" glass:

For 50 plf distributed load:

L = (M/w)= 354.0#'/50plf = 7.08'

Maximum Panel height for 25 psf live load

$L = (354.0\#'*2/25\ psf)^{1/2} = 5.32'$ (5/8" glass cantilevered)

Maximum wind load based on glass strength

$w = (354.0\#'*2)/(h^2)$

$h = \sqrt{(354.0\#'*2/w)}$

For surface mounted base shoe:

Glass light height = 36"

Calculate maximum wind load:

$w = (566.4\#')/(0.55*3^2) = 114.4$ psf

Glass light height = 42"

Calculate maximum wind load:

$w = (566.4\#')/(0.55*3.5^2) = 84.1$ psf

Determine maximum glass light height for 150 mph exposure D wind, w= 58.7 psf

$h = \sqrt{(566.4\#'/(0.55*58.7)} = 4.189' =$ 4' 2 1/4"

Maximum guard total height = 50 1/4"+4" = 54 1/4" = 4' 6 1/4" for 58.7 psf.

Minimum width for 200# concentrated live load and 42" guard (38" glass) height:

l_{min} = (7,600/4,248) = 1.789'

EDWARD C. ROBISON, PE, SE
10012 Creviston Dr NW
Gig Harbor, WA 98329
253-858-0855/Fax 253-858-0856 elrobison@narrows.com

Deflection: 42" total height, 38" glass height.

$\Delta = Ph^3/(3Ebt^3) = 200*38"^3/(3*10{,}400{,}000*1.789'*0.625^3) = 0.8"$ (200# load min width)

$\Delta = uh^3/(3Et^3) = 50plf*38"^3/(3*10{,}400{,}000*0.625^3) = 0.36"$ (50 plf load)

$\Delta = wh^4/(8Et^3) = 50psf/12*38"^4/(8*10{,}400{,}000*0.625^3) = 0.43"$ (50 psf wind load)

For 3/4" glass

$S = 2*(0.719)^2 = 1.034\ in^3/ft$

$M_{alllive} = 6{,}000psi*1.034\ in^3/ft = 6{,}204"\#/ft = 517'\#$

$M_{allwind} = 9{,}600psi*1.034\ in^3/ft = 9{,}926"\#/ft = 827.2'\#$

DETERMINE MAXIMUM PANEL HEIGHT 3/4" glass:

For 50 plf distributed load:

$L = (M/w) = 517.0\#'/50plf = 10.34'$

Maximum Panel height for 25 psf live load

$L = (517.0\#'*2/25\ psf)^{1/2} = 6.43' = 6' - 5"$ (3/4" glass cantilevered)

Maximum wind load based on glass strength

$w = (517\#')/(0.55h^2)$

$h = \sqrt{[517\#'/(0.55w)]}$

For surface mounted base shoe:

Glass light height = 36"

Calculate maximum wind load:

$w = (827.2\#')/(0.55*3^2) = 167.1$ psf

Glass light height = 42"

Calculate maximum wind load:

$w = (827.2\#')/(0.55*3.5^2) = 122.8$ psf

Determine maximum glass light height for 150 mph exposure D wind, w= 58.7 psf

$h = \sqrt{[827.2\#'/(0.55*58.7)} = 5.062' = 5'\ 3/4" = 60.75"$

Maximum guard total height = 60.75"+4" = 64.75" = 5' 4.75" for 58.7 psf.

Minimum width for 200# concentrated load and 42" guard (38" glass) height:

$l_{min} = (7{,}600/(6{,}204) = 1.225'$

Deflection: 42" total height, 38" glass height.

$\Delta = Ph^3/(3Ebt^3) = 200*38"^3/(3*10{,}400{,}000*1.225'*0.75^3) = 0.68"$ (200# load min width)

$\Delta = uh^3/(3Et^3) = 50plf*38"^3/(3*10{,}400{,}000*0.75^3) = 0.21"$ (50 plf load)

$\Delta = wh^4/(8Et^3) = 50psf/12*38"^4/(8*10{,}400{,}000*0.75^3) = 0.25"$ (50 psf wind load)

EDWARD C. ROBISON, PE, SE
10012 Creviston Dr NW
Gig Harbor, WA 98329
253-858-0855/Fax 253-858-0856 elrobison@narrows.com

WIND BORNE DEBRIS
Glass Guards located in Wind-Borne Debris Region - IBC 1609.2

When design for large missile impact loading as described in ASTM E 1996 to comply with IBC 1609.1.2 or Test Protocol Test Application Standard (TAS) 201-94 to comply with Florida Building Code Section 1626 is required laboratory testing may be required to verify system performance. Typically 3/4" or thicker laminated tempered glass is required to resist the missile impact for 42" guard height.

The need for compliance with these tests is dependent on the local jurisdiction and is beyond the scope of this report. Typically since the guards are not part of the building envelope the testing is not required but when located within a wind-borne debris region consultation with the local code authority is recommended before specifying a specific glass section and the appropriate base shoe.

GLASS LIGHT SPACING
Glass light spacing must be adequate to assure that no direct contact occurs between the glass edges from either differential glass deflections or thermal expansion.
Thermal Expansion of glass:
$\nu = 5x10^{-6}$ in/(in F°)
For a typical 150F° maximum temperature range and 72" maximum glass light length:
$\partial = 5x10^{-6}$ in/(in F°)*150F°*72" = 0.054"

Recommended minimum specified spacing is 1/4" (½" for ¾" glass).
Glass fabrication tolerances may result in spacing smaller than specified. As-installed spacing less than 0.054" is unacceptable and should not be permitted.

GLASS FLATNESS
ASTM C 1048 *Heat Treated Flat Glass - Kind HS, Kind FT Coated and Uncoated Glass* allows 0.08" bow for 35" to 47" width. Installer should try to align bows to reduce the misfit between lights. Out of plane variation between glass lights is unavoidable but may be reduced by specifying vertically treated glass and installing glass with the tong marks inserted into the base shoe.

EDWARD C. ROBISON, PE, SE
10012 Creviston Dr NW
Gig Harbor, WA 98329
253-858-0855/Fax 253-858-0856 elrobison@narrows.com

DRY-GLAZE TAPER-LOC® SYSTEM

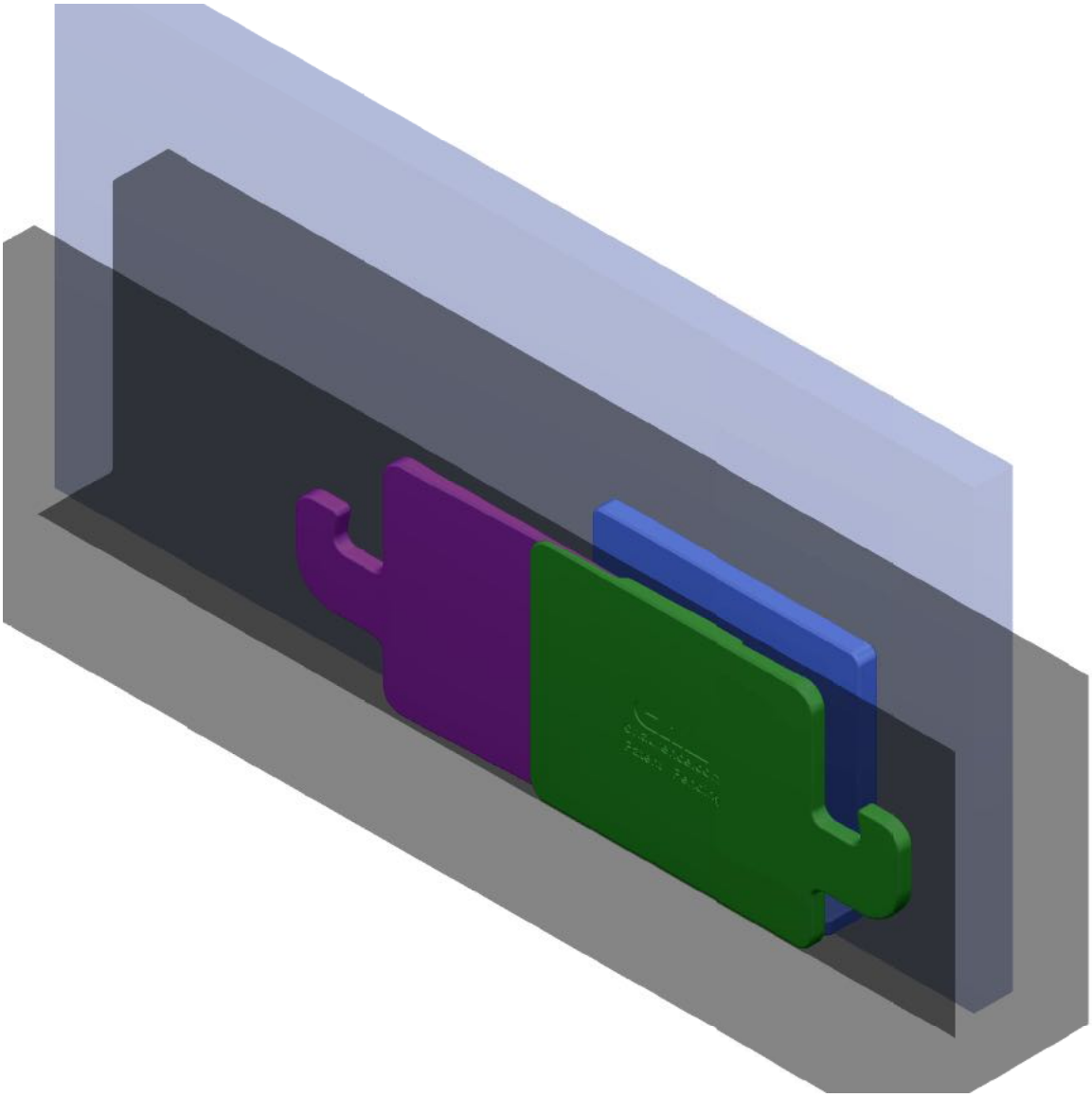

Glass is clamped inside the aluminum base shoe by the Taper-Loc® Shoe Setting Plate (L shaped piece on the back side) and two Taper-Loc® Shim Plates (front side). The glass is locked in place by the compressive forces created by the Taper-Loc® shim plates being compressed together by the installation tool. Use of the calibrated installation tool assures that the proper compressive forces are developed. Until the shim plates are fully installed the glass may be moved within the base shoe for adjustment.

Glass may be extracted by reversing the installation tool to extract tapers.

EDWARD C. ROBISON, PE, SE
10012 Creviston Dr NW
Gig Harbor, WA 98329
253-858-0855/Fax 253-858-0856 elrobison@narrows.com

Setting plate locks into place in the base shoe by friction created by the compression generated when the shim plates are locked into place.

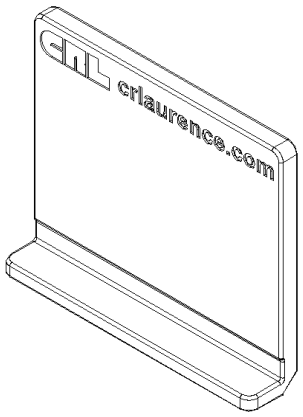

Installation force:
T_{des} = 250#" design installation torque
T_{max} = 300#" maximum installation torque
Compressive force generated by the installation torque:
C = (0.2*250#"/1.0")/ sin(1.76˚)
C = 1,628#

Frictional force of shims and setting plate against aluminum base shoe:
coefficient of friction, μ= 0.65
f = 2*(1,628#0.65) = 2,117#

Frictional force of shims against glass:
μ = 0.36
f = 1,628*0.36 = 586#

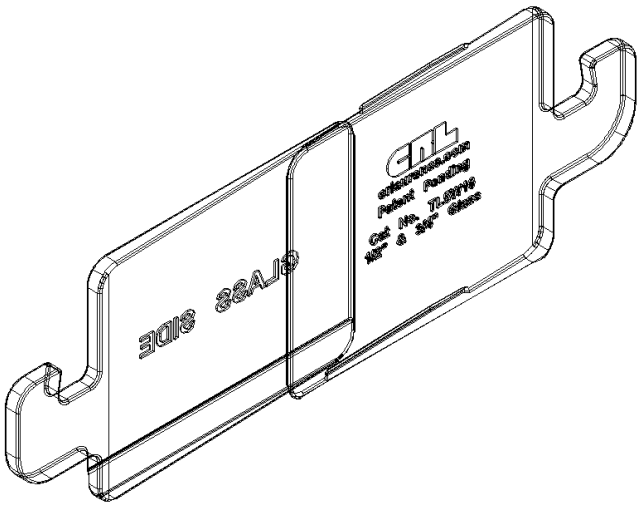

Resistance to glass pull out:
U = 586#

Safety factor for 200# pullout resistance =
586/200 = 2.93 For single set.
Minimum recommended installation torque:
4/(2*2.93)*250 = 170#"

Extraction force required to remove tapers after installation at design torque:
T = 250*(0.7/0.2) = 875#"

EDWARD C. ROBISON, PE, SE
10012 Creviston Dr NW
Gig Harbor, WA 98329
253-858-0855/Fax 253-858-0856 elrobison@narrows.com

Glass anchorage against overturning:
Determine reactions of Taper-Loc® plates on the glass:
Assuming elastic bearing on the glass fiber reinforced polycarbonate parts the reactions will have centroids at approximately 1/6*2.55” from the upper and lower edges of the bearing surfaces:
R_{CU} @ 1/6*2.55 = 0.425”

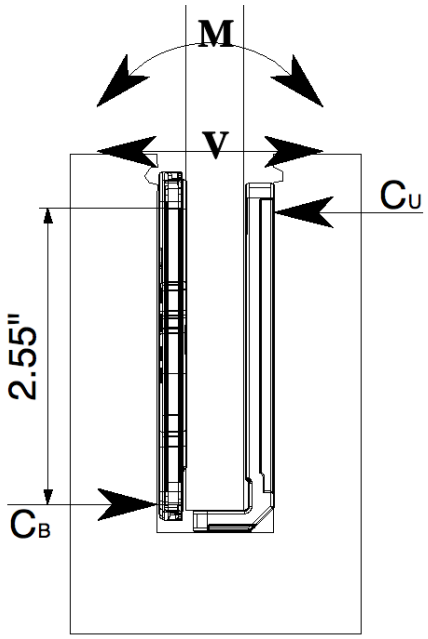

From ∑M about R_{CU} = 0
0 = M+V*(0.425”0.5”) - R_{CB} *1.7”
Where M = V*38”
substitute and simplify:
0 = V*38.925” - R_{CB} *1.7”
Solving for - R_{CB}
R_{CB} = V*38.925/1.7 = 22.9V
For C_B = 3,000 psi:
R_{CB} = 3.5”*(2.55”/2)*3,000 psi/2 = 6,694#
V_a = 6,694/22.9 = 292#
M_a = R_{CB}*(2/3*2.55”) = 11,380#”
R_{CB} = R_{CB} +V = 6,694+292# = 6,986#

At maximum allowable moment determine bending in base shoe legs:

M_s = C*(0.188+2.55”/2) + R_{CB} *(0.188+2.55-0.425) =
M_s = 1,954*(1.463) + 6,986 *(2.313) = 19,017#”

Base shoe tributary length of leg that resists bending from load:
L = 3.5”+8*0.5”+2*(3.25”) = 14”, This is the maximum allowable spacing of the Taper-Loc® system so represents the maximum loading condition.

Strength of leg 14” length = 14,062#”*14/12 = 16,406#”
Adjustment to allowable load based on base shoe strength:
M_a = 16,406/19,017*11,380 = 9,818#”

Allowable Moment per lineal foot of glass rail:
M_a = 9,818*12/14 = 8,415#”

EDWARD C. ROBISON, PE, SE
10012 Creviston Dr NW
Gig Harbor, WA 98329
253-858-0855/Fax 253-858-0856 elrobison@narrows.com

GLASS STRESS CONCENTRATION FROM TAPER-LOC® SYSTEM

The Taper-Loc® System provides a concentrated support:
Stress concentration factor on glass based on maximum 14" glass width to each Taper-Loc® set.

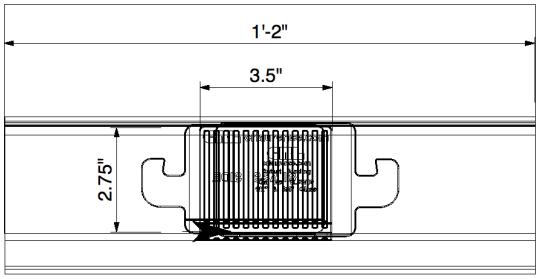

Moment concentration factor
$C_M = [1+(1-a/b)^2(1-c/b)^3(1-t/b)^{1/3}]^{1/2}$
a = 2.75" (bottom of glass to top of bearing)
b = center to center spacing of supports or width of glass.
c = length of bearing
glass thickness will have less than 1% change in the stress concentration so can be ignored for the three glass thicknesses.
$C_M = [1+(1-2.75/14)^2(1-3.5/14)^3(1-.5/14)^{1/3}]^{1/2} = 1.13$
b/h = 14"/35" = 0.4" < 1 based on maximum spacing of 14" and glass height of 35" (36" rail)
$C_{M'} = 1+(C_M - 1)*(b/h)^3 = 1.008$
Since adjustment is typically under 1% it can be ignored when glass height exceeds 21" when $C_{M'} < 1.04$
$F_b = 6{,}000$

Shear concentration factor:
$C_V = 14"/3.5"*(2-3.5/14) = 7.0$
$F_{Va} = 3{,}000$ psi maximum allowable shear stress

Allowable Glass Loads:
$M_a = S*6{,}000/1.13$
$V_a = t*b/7.0$

For 1/2" glass, 14" high x14" TaperLoc spacing - $C_{M'} = 1.13$:
$M_a = 0.44*6{,}000/1.13 = 2{,}336"\# = 194.7'\#$
$V_a = 0.5*14*3{,}000/7.0 = 3{,}000\#$
Since shear load in all scenarios is under 10% of allowable it can be ignored in determining allowable bending since it has less than 1% impact on allowable bending loads or rail heights.

Maximum edge distance for edge of glass to centerline of Taper-Loc® plates:
$e_{des} = 14/2 = 7"$ for design conditions (no reduction in allowable loads)
$e_{max} = e + e_{des}/2$: $(25*e*3.5')+25*1.17*3.5^2/2 = 229.6$: solve for e
$e_{max} = 3.5" + [229.6 - 25*1.17*3.5^2/2]/(25*3.5) = 10.4"$ (to CL of Taper-Loc® plates)

EDWARD C. ROBISON, PE, SE
10012 Creviston Dr NW
Gig Harbor, WA 98329
253-858-0855/Fax 253-858-0856 elrobison@narrows.com

B5S 2 1/2" X 4 1/8" GLASS BALUSTRADE BASE SHOE

6063-T52 Aluminum extrusion
Fully tempered glass glazed in place by wet glazing cement or dry glazed with Taper-Loc®

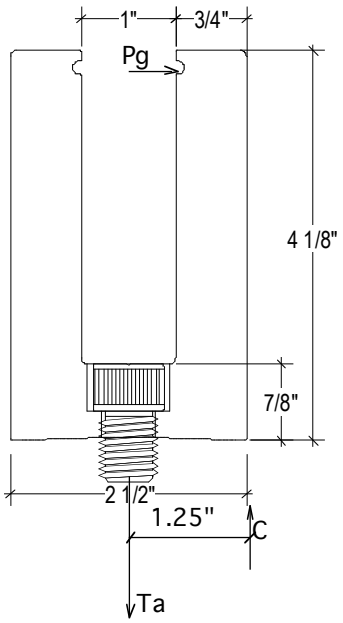

Shoe strength – Vertical legs:
Glass reaction by bearing on legs to form couple. Allowable moment on legs:

F/Ω = 11.3 ksi (ADM Table 2-20)
$Z = 12"*0.75"^2*/4 = 1.69\ in^3/ft$
$M_a = 11.3\ ksi*1.69\ in^3/ft = 19{,}100\#"/ft$

Base shoe anchorage:
Typical rail section: 42" high 50 plf top rail load or 25 psf panel load
$M_t = 50plf*42" = 2{,}100"\#/ft$
$M_w = 25\ psf*3.5'*21" = 1{,}837.5"\#$

Typical Anchor load – 12" o.c. – $T_a = 2{,}100"\#/1.25" = 1{,}680\#$

For 1/2" cap screw to tapped steel, CRL Screw part SHCS12x34 or SHCS12x1
$T_n = A_{sn}*t_c*0.6*F_{tu}$
where t_c = 0.25"; A_{sn} = 1.107" and F_{tu} = 58 ksi (A36 steel plate)
$T_n = 1.107"*0.25*0.6*58\ ksi = 9.63\ k$
Bolt tension strength = $0.75*67.5\ ksi*0.1419\ in^2 = 7.18\ k$
Since shear load is under 0.2* shear strength (V_a = 2.7k) interaction can be ignored.
Use 5/16" minimum for maximum load:
Maximum service load: 7.18k/2 = 3,592#

Check shear rupture at cap screw : 2015 ADM J.7.2
$A_{nv} = \pi Dt = \pi*(13/16")*0.375" = 0.957\ in^2$
$R_n = F_{su}A_{nv}/k_t = 0.6*22ksi*0.957/1 = 12{,}635 \geq 9{,}630\#$ thread stripping
$R_a = Rn/\Omega = 12{,}635/1.95 = 6{,}480\# \geq 3{,}592\#$ allowable cap screw tension load.

Using the 2015 ADM J.8 equation:
$R_n = 1.33F_{tu}A_{pb}$ $R_a = R_n/\Omega$ with $\Omega = 1.95$
$R_a = 1.33*22ksi/1.95 = 15$ ksi for the 6063-T52 alloy us

Maximum allowable moment for 12" on center spacing and direct bearing of base shoe on steel:
M = 3,592#*[1.25"-0.5*3,592/(15ksi*12)] = 4,454 4,470"# = 372.5'# per anchor

EDWARD C. ROBISON, PE, SE
10012 Creviston Dr NW
Gig Harbor, WA 98329
253-858-0855/Fax 253-858-0856 elrobison@narrows.com

Maximum allowable wind loads ½" cap screws at 12" o.c. to structural steel.

36" height: w = 372.5#'/(0.55*3^2) = 75.3 psf

42" height: w = 372.5#'/(0.55*3.5^2) = 55.3 psf

Spacing for full strength of ⅝" glass = 4,470/6,797*12" = 7.89" o.c. average

B5S Surface Mounted Cont:

Maximum allowable wind loads **½" cap screws at 6" o.c. to structural steel** develops full strength of ½" and ⅝" glass:

M = 3,592#*[1.25"-0.5*3,592/(30ksi*6)] = 4,454"# = 371.18'# per anchor

36" height: w = 2*371.78#'/(0.55*3^2) = 150 psf

42" height: w = 2*371.78#'/(0.55*3.5^2) = 110.2 psf

For anchor into concrete:

3/8" diameter Screw-in anchor Hilti Kwik HUS-EZ (KH-EZ) ⅜" x 4" manufactured by Hilti in accordance with ESR-3027 or Hilti HSL-4 M8 x 3-3/4" anchor in accordance with ESR-4386.
Strength calculated in accordance with ACI 318-19 Chapter 17. $f'_c \geq 3{,}000$ psi
2-1/2" effective embedment nominal depth = 3-9/16" for KH-EZ and 3-5/16" for HSL-4
ϕN_{sa} = 0.65*4,400# = 2,860#
For concrete breakout strength:
$N_{cb} = [A_{Nc}/A_{Nco}]\varphi_{ed,N}\varphi_{c,N}\varphi_{cp,N}N_b$
A_{Nc}= (1.5*2.5"*2)*(1.5*2.5*2) = 56.25in^2 **Edge distance = 3 3/4"**
A_{Nco}= 9*2.5^2 = 56.25in^2
$C_{a,min}$ = 1.5*2.5" = 3.75
C_{ac} = 2.5*2.5" = 6.25
$\varphi_{ed,N}$ = 1.0
$\varphi_{c,N}$ = 1.0 (from ESR-3027)
$\varphi_{cp,N}$= 1.0 (from ESR-3027)
$N_b = 24*1.0*\sqrt{3000}*2.5^{1.5}$ = 5,196#
N_{cb} = 56.25/56.25*1.0*1.0*1.0*5,196 = 5,196#

EDWARD C. ROBISON, PE, SE
10012 Creviston Dr NW
Gig Harbor, WA 98329
253-858-0855/Fax 253-858-0856 elrobison@narrows.com

From ESR-3027 anchor pull out does not control design
ϕN_n = 0.65*5,196# = 3,377#
$N_s = \phi N_n/1.6$ = 3,377#/1.6 = 2,111#

Anchor steel strength will not control
Since shear load is under 0.2* shear strength interaction can be ignored; ϕV_{nc} >1.6*50/0.2= 400#
Moment resistance of each anchor:
For surface mounted
ϕM_n = 3,377#*[1.25-0.5*3,377/(2*0.85*3ksi*12)] = 4,063"# = 338.5'# per anchor
$M_a = \phi M_n/\lambda$ = 4,063"#/1.6 = 2,539"# = 211.58'#
(at 1' spacing doesn't develop full allowable glass load.)
Maximum allowable wind loads (ASD) for anchors at 12" o.c.:

36" height: w = 211.58#'/(0.55*3^2)= 42.7 psf

42" height: w = 211.58#'/(0.55*3.5^2)= 31.4 psf

B5S Surface Mounted Cont:
For 6" on center spacing:
Minimum edge distance for 6" spacing is 3.75"
A_{Nc}= (6)*(1.5*2.5*2) = 45in^2 **Edge distance = 3 3/4"**
N_{cb} = 45/56.25*1.0*1.0*1.0*5,196 = 4,157#
ϕN_n = 0.65*4,157# = 2,702#
$N_s = \phi N_n/1.6$ = 2,702#/1.6 = 1,689#
Moment resistance for anchors at 6" on center:
ϕM_n = 2*2,702#*[1.25-0.5*2*2,702/(2*0.85*3ksi*12)] = 6,516"# = 543.03'#/ft
$M_a = \phi M_n/\lambda$ = 6,516"#/1.6 = 4,073"# = 339.4'#/ft
NOTE: When attached to concrete alternative anchors may be designed in accordance to the anchor manufacturer's engineering reports that can develop greater strength.

Maximum allowable wind loads (ASD):

36" height: w = 339.4#'/(0.55*3^2)= 68.6 psf

42" height: w = 339.4#'/(0.55*3.5^2)= 50.4 psf

Determine minimum allowable edge distance for anchors at 12"on center:
Minimum acceptable edge distance is 2.35" For 42" guard height
A_{Nc}= (1.5*2.5"*2)*(1.5*2.5+2.35) = 45.75in^2 **Minimum edge distance is 2.35"**
N_{cb} = 45.75/56.25*1.0*1.0*1.0*5,196 = 4,226#
ϕN_n = 0.65*4,226# = 2,747#
$N_s = \phi N_n/1.6$ = 2,747#/1.6 = 1,717#
ϕM_n = 2,747#*[1.25-0.5*2,747/(2*0.85*3ksi*12)] = 3,372"# = 281'# per anchor
$M_a = \phi M_n/\lambda$ = 3,372"#/1.6 = 2,108"# = 175.6 (at 1' spacing doesn't develop full allowable glass load.)

EDWARD C. ROBISON, PE, SE
10012 Creviston Dr NW
Gig Harbor, WA 98329
253-858-0855/Fax 253-858-0856 elrobison@narrows.com

Maximum allowable wind loads (ASD):

36" height: w = 175.6#'/(0.55*3^2)= 35.5 psf

42" height: w = 175.6#'/(0.55*3.5^2)= 26.1 psf

Determine minimum allowable edge distance for anchors at 6"on center:

Minimum installation edge distance is 1.75" for the anchors

A_{Nc}= (6)*(1.5*2.5+1.75) = 33in^2 **Minimum edge distance is 1.75"**

N_{cb} = 33.0/56.25*1.0*1.0*1.0*5,196 = 3,048#

øN_n = 0.65*3,048# = 1,981#

N_s = øN_n/1.6 = 1,981#/1.6 = 1,238#

øM_n = 2*1,981#*[1.25-0.5*2*1,981/(2*0.85*3ksi*12)] = 4,824"# = 402'# per anchor

M_a = øM_n/λ = 4,824"#/1.6 = 3,015"# = 251.26'# (at 1' spacing doesn't develop full allowable glass load.)

Maximum allowable wind loads (ASD):

36" height: w = 251.26#'/(0.55*3^2)= 50.8 psf

42" height: w = 251.26#'/(0.55*3.5^2)= 37.3 psf

B5S Fascia (Side) mounted base shoe:

Verify Anchor Pull through

For counter sunk screw

P_{nov} = (0.27+1.45t/D)DtF_{ty}

=(0.27+1.45*.5*/.5).5*.5*16 ksi

P_{nov} = 6,880#

P_a = 6,880/3 = 2,293#

A_{nv} = πDt = π*(13/16")*0.25" = 0.638 in^2

R_n = $F_{su}A_{nv}/k_t$ = 0.6*22ksi*0.638/1 = 8423 ≤ 9,630# thread stripping

R_a = R_n/Ω = 8423/1.95 = 4,320# ≥ 3,592# allowable cap screw tension load.

Aluminum strength controls

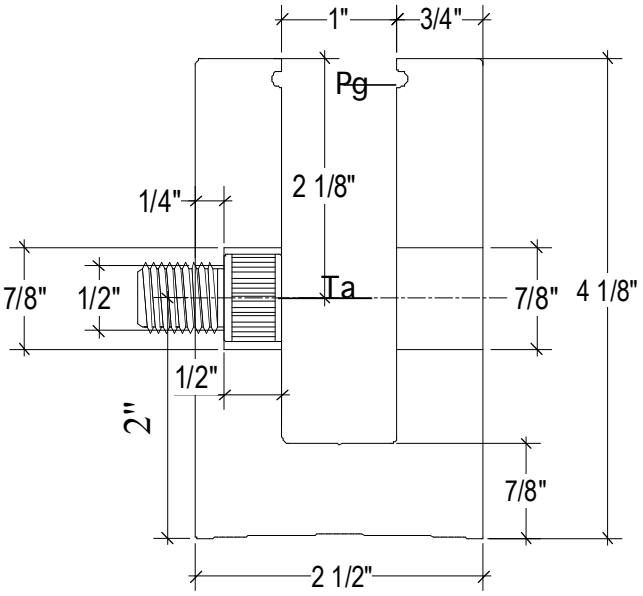

EDWARD C. ROBISON, PE, SE
10012 Creviston Dr NW
Gig Harbor, WA 98329
253-858-0855/Fax 253-858-0856 elrobison@narrows.com

For inset bolt
Shear strength:
t_{min} = 0.25”
$P_{nov} = F_{tu}/\sqrt{3}*(A_v)$
A_v = 0.25”*π*.75”=0.589 in^2
P_{nov} = 30ksi/√3*(0.589 in^2)= 10.2k

Dead Load
DL= 3.5’*9.5psf+10.4plf = 43.7plf
Moment from dead load:
M_D = 43.7plf*2.5/2 = 54.6”#/ft = 4.55’#/ft

Since shear load is under 0.2* shear strength (>2.7 k) interaction can be ignored.
For standard installation, 42” (46” above bottom of shoe) guard height and 50 plf top rail load
M_L = 46”*50plf = 2,300”#
Moment resistance of single anchor:
M_a = 2,293*2” = 4,586”# = 382.17’#

Required anchor spacing = 4,586/2,300 = 1.994‘ use 2’
Maximum anchor spacing is 2’ o.c. and within 1’ of rail end.

Maximum allowable wind loads (ASD) **for ½” cap screw at 12” o.c. spacing, into steel:**
M_w = 382.17-4.55 = 377.62’#/ft
36” height: w = 377.62#’/(0.55*3.333*3.0)= 68.7 psf
42” height: w = 377.62#’/(0.55*3.5*3.833) = 51.2 psf

Maximum allowable wind loads (ASD) **for ½” cap screw at 6” o.c. spacing, into steel:**
M_w = 2*382.17-4.55 = 759.79’#/ft
36” height: w = 759.79#’/(0.55*3.333*3.0)= 138.2 psf
42” height: w = 759.79#’/(0.55*3.5*3.833) = 103.0 psf

EDWARD C. ROBISON, PE, SE
10012 Creviston Dr NW
Gig Harbor, WA 98329
253-858-0855/Fax 253-858-0856 elrobison@narrows.com

B5S Fascia (Side) mounted base shoe cont:
For anchor into concrete:
3/8" diameter Screw-in anchor Hilti Kwik HUS-EZ (KH-EZ) ⅜" x 4" manufactured by Hilti in accordance with ESR-3027 or Hilti HSL-4 M8 x 3-3/4" anchor in accordance with ESR-4386. Strength calculated in accordance with ACI 318-19 Chapter 17. $f'_c \geq 3{,}000$ psi
2-1/2" effective embedment
$\phi N_{sa} = 0.65*4{,}400\# = 2{,}860\#$
For concrete breakout strength:
$N_{cb} = [A_{Nc}/A_{Nco}]\varphi_{ed,N}\varphi_{c,N}\varphi_{cp,N}N_b$
$A_{Nc} = (1.5*2.5"*2)*(1.5*2.5+2.06") = 43.575in^2$ **Minimum edge distance = 2.06"**
$A_{Nco} = 9*2.5^2 = 56.25in^2$
$C_{a,min} = 1.5*2.5" = 3.75$
$C_{ac} = 2.5*2.5" = 6.25$
$\varphi_{ed,N} = 1.0$
$\varphi_{c,N} = 1.0$ (from ESR-3027)
$\varphi_{cp,N} = 1.0$ (from ESR-3027)
$N_b = 24*1.0*\sqrt{3000}*2.5^{1.5} = 5{,}196\#$
$N_{cb} = 43.575/56.25*1.0*1.0*1.0*5{,}196 = 4{,}025\#$

From ESR-2526 anchor pull out does not control design
$\phi N_n = 0.65*4{,}025\# = 2{,}616\#$
$N_s = \phi N_n/1.6 = 2{,}616\#/1.6 = 1{,}635\#$

Anchor steel strength will not control

Moment resistance of each anchor:
For Fascia mounted
$\phi M_n = 2{,}616\#*[2.06-0.5*2{,}616/(2*0.85*3ksi*12)] = 5{,}333"\# = 444.42'\#$ per anchor
$M_a = \phi M_n/\lambda = 5{,}333"\#/1.6 = 3{,}333"\# = 277.76'\#$ (at 1' spacing)
Maximum allowable wind loads (ASD) for 12" o.c. anchor spacing, into steel:
$M_w = 277.76-4.55 = 273.21'\#/ft$
36" height: $w = 273.21\#'/(0.55*3.333*3.0) = 49.7$ psf
42" height: $w = 273.21\#'/(0.55*3.833*3.5) = 37.0$ psf

For 6" on center spacing:
Minimum edge distance for 6" spacing is 3.75"
$A_{Nc} = (6)*(1.5*2.5+2.06) = 34.86in^2$ **Edge distance = 2.06"**
$N_{cb} = 34.86/56.25*1.0*1.0*1.0*5{,}196 = 3{,}220\#$
$\phi N_n = 0.65*3{,}220\# = 2{,}093\#$
$N_s = \phi N_n/1.6 = 2{,}093\#/1.6 = 1{,}308\#$
Moment resistance for anchors at 6" on center:
$\phi M_n = 2*2{,}093\#*[2.0-0.5*2*2{,}093/(2*0.85*3ksi*12)] = 8{,}229"\# = 685.74'\#/ft$

EDWARD C. ROBISON, PE, SE
10012 Creviston Dr NW
Gig Harbor, WA 98329
253-858-0855/Fax 253-858-0856 elrobison@narrows.com

B5S Fascia (Side) mounted base shoe cont:
$M_a = øM_n/λ$ = 8,229"#/1.6 = 5,143"# = 428.59'#/ft
Maximum allowable wind loads for anchors at 6" o.c.:
M_w = 428.59-4.55 = 424.04'#/ft
36" height: w = 424.04#'/(0.55*3.333*3.0)= 77.1 psf
42" height: w = 424.04#'/(0.55*3.833*3.5) = 57.5 psf

Fascia (Side) mounted B5S base shoe to wood:
For Lag screws into solid wood (DFL, Southern Pine or equivalent density G≥0.49):
3/8" Lag screws strength in per *National Design Specification for Wood Construction*:
Required withdrawal strength for 50 plf live load on 42" rail:
T = 50plf*46"/2.06" = 1,117#/ft
T' = 2,300"#/(2.06-0.5*1,117/(12*625psi) = 1,158# (for wood bearing)
W = 296 pli embedment From NDS Table 11.2A
For dry or interior applications, C_m = 1.0, C_D = 1.6 short duration load
e = 1,158#/(296*1.6) = 2.45" Use 3/8" x 4" lag screws
For exterior wet applications, C_m = 0.7 applies when moisture content of wood may exceed 19%, C_D = 1.6
e = 1,158#/(296*1.6*0.70) = 3.5" Use 3/8" x 4" or longer lag screws
4" screw embed depth = 4"-0.25"-0.219 = 3.53"
Moment Strength For lags at 12" on center:
For dry conditions:
T_i = 3.53*296*1.6 = 1,670#
M_{ia} = 1,670*(2.06-0.5*1,670/(12*625psi) = 3,256"#/ft = 271.41'#
M_w = 271.41-4.55 = 266.86'#/ft
36" height: w = 266.86#'/(0.55*3.333*3.0)= 48.1 psf
42" height: w = 266.86#'/(0.55*3.833*3.5) = 36.2 psf
For wet conditions:
T_o = 3.53*296*1.6*0.7 = 1,170#
M_{oa} = 1,170*(2.06-0.5*1,170/(12*625psi) = 2,319"#/ft = 193.25'#
M_w = 193.25-4.55 = 188.7'#/ft
36" height: w = 188.7#'/(0.55*3.333*3.0)= 34.4 psf
42" height: w = 188.7#'/(0.55*3.833*3.5) = 25.6 psf

Moment Strength For lags at 6" on center:
For dry conditions:
2*T_i = 2*1,670# = 3,340#
$M_{ia6"}$ = 3,340*(2.06-0.5*3,340/(12*625psi) = 6,137"#/ft = 511.39'#
M_w = 511.39-4.55 = 506.84'#/ft
36" height: w = 506.84#'/(0.55*3.333*3.0)= 92.4 psf
42" height: w = 506.84#'/(0.55*3.833*3.5) = 68.8 psf
For wet conditions:
2*T_i = 2*1,170# = 2,340#
$M_{0a6"}$ = 2,340*(2.06-0.5*2,340/(12*625psi) = 4,455"#/ft = 371.28'#
M_w = 371.28-4.55 = 366.73'#/ft
36" height: w = 366.73#'/(0.55*3.333*3.0)= 66.7 psf
42" height: w = 366.73#'/(0.55*3.833*3.5) = 49.7 psf

EDWARD C. ROBISON, PE, SE
10012 Creviston Dr NW
Gig Harbor, WA 98329
253-858-0855/Fax 253-858-0856 elrobison@narrows.com

B5L Low Profile Base Shoe

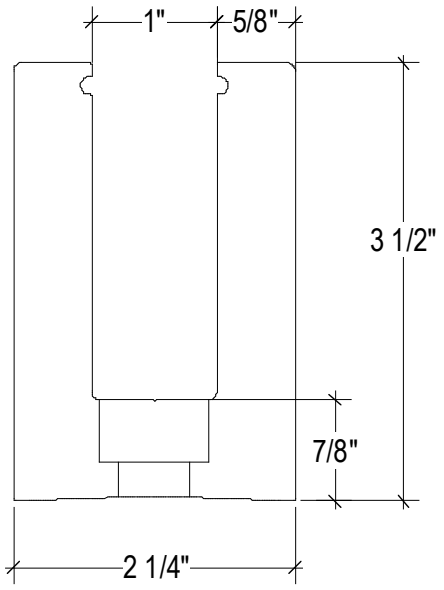

6063-T52 Aluminum extrusion
Fully tempered glass glazed in place with wet glazing cement. Channel depth is inadequate to accommodate the Taper-Loc® system fully within the base shoe.
Shoe strength – Vertical legs:
Glass reaction by bearing on legs to form couple. Allowable moment on legs:
$M_a = S_l F_y$
F_y = 12.5 ksi (ADM Table 2-23, Sec 3.4.4 and 3.4.13)
S_l = 12"*0.625"^{2}*/6 = 0.78125 in^3/ft
M_a = 12.5 ksi*0.78125 in^3/ft = 9,766#"/ft
F/Ω = 11.3 ksi (ADM Table 2-20)
Z = 12"*0.625"^{2}*/4 = 1.17 in^3/ft
M_a = 11.3 ksi*1.17 in^3/ft = 13,200#"/ft
Leg shear strength @ base
t_{min} = 0.625"
F_v= 5.5 ksi (ADM Table 2-23, Sec 3.4.20
V_{all} = 0.625"*12"/ft*5.5 ksi = 41.25 k/ft

For **1/2" cap screw to tapped steel**, CRL Screw part SHCS12x34 or SHCS12x1
$T_n = A_{sn}*t_c*0.6*F_{tu}$
where t_c = 0.25"; A_{sn} = 1.107" and F_{tu} = 58 ksi (A36 steel plate)
T_n = 1.107"*0.25*0.6*58 ksi = 9.63 k
Bolt tension strength = 0.75*67.5 ksi*0.1419 in^2 = 7.18 k
Since shear load is under 0.2* shear strength (V_a = 2.7k) interaction can be ignored.
Use 5/16" minimum for maximum load:
Maximum service load: 7.18k/2 = 3,592#
Maximum allowable moment for 12" on center spacing and direct bearing of base shoe on steel:
M = 3,592#*[1.125"-0.5*3,592/(30ksi*12)] = 4,023"# = 335.26'# per anchor

Maximum allowable wind loads (ASD) **½" cap screws at 12" o.c.** to structural steel:
36" height: w = 335.26#'/(0.55*3^2) = 67.7 psf
42" height: w = 335.26#'/(0.55*3.5^2) = 49.8 psf

To develop the full strength of ½" or ⅝" glass anchor spacing must be decreased to an average spacing of:
½" glass : 67.7/71.1*12 = 11.43" o.c.
⅝" glass: 67.7/114.4*12 = 7.10" o.c.

Maximum allowable wind loads (ASD) **½" cap screws at 6" o.c.** to structural steel:
36" height: w = 2*333#'/(0.55*3^2) = 134.5 psf
42" height: w = 2*333#'/(0.55*3.5^2) = 98.8 psf

EDWARD C. ROBISON, PE, SE
10012 Creviston Dr NW
Gig Harbor, WA 98329
253-858-0855/Fax 253-858-0856 elrobison@narrows.com

B5L Surface Mounted Continued:
For anchor into concrete:
3/8" diameter Screw-in anchor Hilti Kwik HUS-EZ (KH-EZ) ⅜" x 4" manufactured by Hilti in accordance with ESR-3027 or Hilti HSL-4 M8 x 3-3/4" anchor in accordance with ESR-4386.
Strength calculated in accordance with ACI 318-19 Chapter 17.
$f'_c \geq 3{,}000$ psi
2-1/2" effective embedment
For concrete breakout strength:
$N_{cb} = [A_{Nc}/A_{Nco}]\varphi_{ed,N}\varphi_{c,N}\varphi_{cp,N}N_b$
A_{Nc}= (1.5*2.5"*2)*(1.5*2.5*2) = 56.25in^2 **Edge distance = 3 3/4"**
A_{Nco}= 9*2.5^2 = 56.25in^2
$C_{a,min}$ = 1.5*2.5" = 3.75
C_{ac} = 2.5*2.5" = 6.25
$\varphi_{ed,N}$ = 1.0
$\varphi_{c,N}$ = 1.0 (from ESR-3027)
$\varphi_{cp,N}$= 1.0 (from ESR-3027)
N_b = 24*1.0*$\sqrt{3000}$*2.5$^{1.5}$ = 5,196#
N_{cb} = 56.25/56.25*1.0*1.0*1.0*5,196 = 5,196#

From ESR-3027 anchor pull out does not control design
$\varnothing N_n$ = 0.65*5,196# = 3,377#
$N_s = \varnothing N_n/1.6$ = 3,377#/1.6 = 2,111#
Anchor steel strength will not control

Moment resistance of each anchor:
For surface mounted
$\varnothing M_n$ = 3,377#*[1.125-0.5*3,377/(2*0.85*3ksi*12)] = 3,705"# = 308.8'# per anchor
$M_a = \varnothing M_n/\lambda$ = 3,705"#/1.6 = 2,315"# = 193.0'# (at 1' spacing doesn't develop full allowable glass load for 1/2" glass.)
Maximum allowable wind loads (ASD):
36" height: w = 193.0#'/(0.55*3^2)= 39.0 psf
42" height: w = 193.0#'/(0.55*3.5^2)= 28.6 psf

Minimum acceptable edge distance for 50plf live load
A_{Nc}= 2100/2315*56.2 = 50.98
b_{ac} = 50.98/(1.5*2.5"*2) - (1.5*2.5) = 3.047" **Minimum edge distance is 3.047"**
N_{cb} = 50.98/56.25*1.0*1.0*1.0*5,196 = 4,709#
$\varnothing N_n$ = 0.65*4,709# = 3,061#
$N_s = \varnothing N_n/1.6$ = 3,061#/1.6 = 1,913#
$\varnothing M_n$ = 3,061#*[1.125-0.5*3,061/(2*0.85*3ksi*12)] = 3,367"# = 280.59'# per anchor
$M_a = \varnothing M_n/\lambda$ = 3,367"#/1.6 = 2,104"# = 175.37'# (at 1' spacing doesn't develop full allowable glass load.)

EDWARD C. ROBISON, PE, SE
10012 Creviston Dr NW
Gig Harbor, WA 98329
253-858-0855/Fax 253-858-0856 elrobison@narrows.com

B5L Surface Mounted Continued:
Maximum height for 50 plf live load for 12" o.c. anchors at 3.047" edge distance:
H_{max50} = 2,104"#/50 = 42.08"

Maximum allowable wind loads (ASD) at 3.047" edge distance, 12" on center:
36" height: w = 175.37#'/(0.55*3^2) = 35.4 psf
42" height: w = 175.37#/(0.55*3.5^2) = 26.0 psf

For 6" on center spacing:
A_{Nc}= (6)*(1.5*2.5*2) = 45in^2 **Edge distance = 3 3/4"**
N_{cb} = 45/56.25*1.0*1.0*1.0*5,196 = 4,157#
øN_n = 0.65*4,157# = 2,702#
N_s = øN_n/1.6 = 2,702#/1.6 = 1,689#
Moment resistance for anchors at 6" on center:
øM_n = 2*2,702#*[1.125-0.5*2*2,702/(2*0.85*3ksi*12)] = 5,841"# = 486.74'#/ft
M_a = øM_n/λ = 5,841"#/1.6 = 3,651"# = 304.21'#/ft
NOTE: When attached to concrete alternative anchors may be designed in accordance to the anchor manufacturer's engineering reports that can develop greater strength.

Maximum allowable wind loads (ASD) for anchors at 6" o.c.:
36" height: w = 304.21#'/(0.55*3^2)= 61.5 psf
42" height: w = 304.21#'/(0.55*3.5^2)= 45.2 psf

Minimum edge distance for 6" on center anchors:
A_{Ncg}= (6)*(1.5*2.5+1.75) = 33in^2 **Minimum allowable edge distance is 1.75"**
N_{cb} = 33/56.25*1.0*1.0*1.0*5,196 = 3,048#
øN_n = 0.65*3,048# = 1,981#
N_s = øN_n/1.6 = 1,981#/1.6 = 1,238#
øM_n = 2*1,981#*[1.125-0.5*2*1,981/(2*0.85*3ksi*12)] = 4,329"# = 360.75'#
M_a = øM_n/λ = 4,329"#/1.6 = 2,706"# = 225.47'# (at 1' spacing doesn't develop full allowable glass load.)
Maximum allowable wind loads (ASD) for anchors at 6" o.c. 1.75" edge distance:
36" height: w = 225.47#'/(0.55*3^2)= 45.6 psf
42" height: w = 225.47#'/(0.55*3.5^2)= 33.5 psf

EDWARD C. ROBISON, PE, SE
10012 Creviston Dr NW
Gig Harbor, WA 98329
253-858-0855/Fax 253-858-0856 elrobison@narrows.com

B5T Tapered Base Shoe

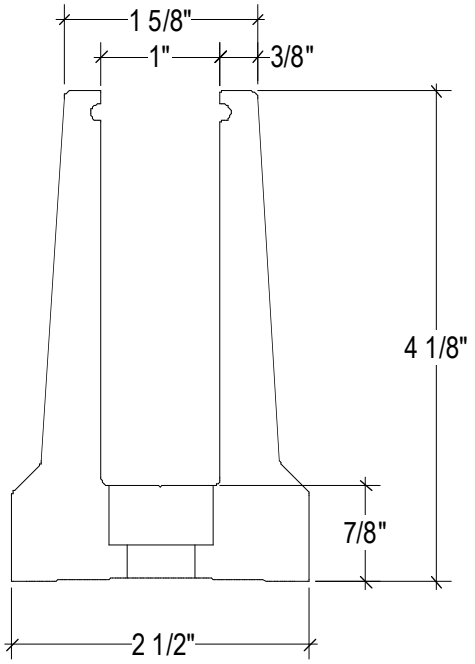

6063-T52 Aluminum
Shoe strength – Vertical legs:
Glass reaction by bearing on legs to form couple.
Allowable moment on legs:
F/Ω = 11.3 ksi (ADM Table 2-20)
Z = 12"*0.5"^{2}*/4 = 0.75 in^3/ft
M_a = 11.3 ksi* 0.75 in^3/ft = 8,480#"/ft

Can be anchored down same as the standard 2-1/2" base shoe B5S. The anchorage will have the same strength and loading characteristics.

Embedded Base Shoe Option (All base shoe types can be used)

Calculation based on base shoe embedded without any attachment to reinforcing or otherwise anchored.
Reaction on concrete:
Compression on top edge:

$$0.85*f'_c*a = M/(h-a/2)$$

Solve for a
$1/2a^2-0.85f'_cha - M = 0$
M = 10,000#"/ft, h = 4.125", f'_c = 2,500 psi
$1/2a^2-0.85*2{,}500*4.125a - 10{,}000 = 0$
$1/2a^2-8765.625a - 10{,}000 = 0$
using the quadratic equation to solve for a:
$[8765.625+/- \sqrt{(8765.625^2+4*0.5*10000)}]/(2*0.5) = 1.14"$
1.14" < 1/3*4.125" therefore okay.
Embedded base shoe will safely support 10,000"#/ft of moment

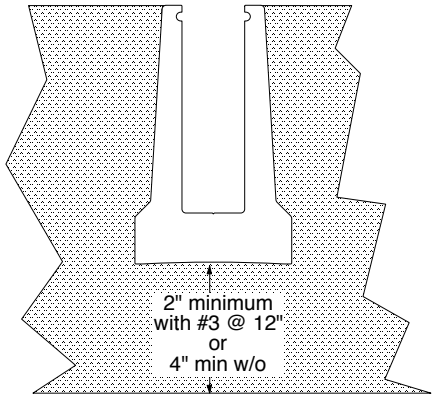

There is no fascia mounted option for the B5T base shoe.

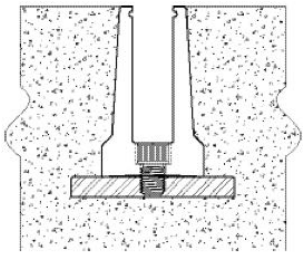

EDWARD C. ROBISON, PE, SE
10012 Creviston Dr NW
Gig Harbor, WA 98329
253-858-0855/Fax 253-858-0856 elrobison@narrows.com

8B Series - Square, Cored Base Shoe
6063-T52 Aluminum extrusion

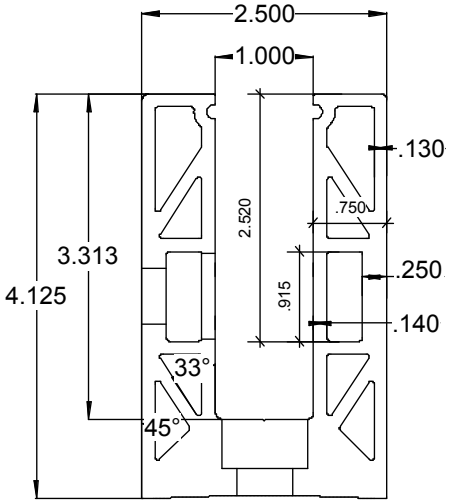

Shoe strength – Vertical legs:
Glass reaction by bearing on legs to form couple.
Allowable moment on legs:
$M_a = S_l * F_t$ or F_c
$F/\Omega = 11.3$ ksi (ADM Table 2-20)

At 3rd cell - Rectangular cell used for fascia mounted option.
Moment resistance across cell
$M_a = A_i * T_a * c = 0.14" * 11.3ksi * (0.75-0.14)$
A_i = area of inside leg
$M_a = 0.965k"/" = 11,600"\#/ft$
Allowable shear across cell - based on shear bending across cell legs allowing rotation at top
$V_a = (S_i+S_o) * T_a/b$
S_i, S_o = section modulus of inside or outside leg
b = height of cell = 0.915"
$V_a = (0.14^2/6+0.25^2/6) * 11.3ksi/0.915"$
$V_a = 169\#/in = 2,030$ plf (won't control)

Strength at bottom cell - truss action around cell-
$M_a = A_v * T_a * c = 0.14" * 11.3ksi * (0.75-0.14) = 11,600"\#/ft$
A_v = area of vertical leg, A_d = Area of diagonal load
Allowable shear across cell:
$V_a = A_d * T_a$
$V_a = (0.14 * 11.3ksi) = 1,580pli = 19,000$ plf (shear won't control)

Maximum allowable glass shear load reaction on top of base shoe, based on base shoe leg strength:
$V_a = M_a/B = 11,600"\#/ft/3.313" = 3,500$ plf

Check leg deflection for 3,800"#/ft moment on rail:
Strain in cell walls:
$\epsilon = (\sigma/E) * B = [(3,800/(0.14" * 12" * 0.61")/10,100,000] * 3.313" = 0.0012"$
$\Delta_\epsilon = (2 * 0.0012")/(0.75/2) = 0.0065"$
$\Delta_b = 3800 * 3.313^2/(3 * 10,100,000 * 0.75^3) = 0.0033"$
$\Delta_T = \Delta_\epsilon + \Delta_b = 0.0065+0.0033 = 0.0098"$
Glass deflection at 42" above base shoe from ase shoe leg deflection
$\Delta_g = 0.0098 * (42/3.313) = 0.124"$ based on 3,800"# glass moment; 0.069" for typical 50 plf LL.

Attachment is same as for B5S base shoe for all uses.
Leg strength and anchor pull-over strength is the same for the 8B58 and 8B34 shoes.

EDWARD C. ROBISON, PE, SE
10012 Creviston Dr NW
Gig Harbor, WA 98329
253-858-0855/Fax 253-858-0856 elrobison@narrows.com

B6N 2 5/8" X 4 1/8" GLASS BALUSTRADE BASE SHOE

Heavy Duty Square Base Shoe
6063-T52 Aluminum extrusion
Fully tempered glass glazed in place, either wet glazing cement or Taper-Loc®.

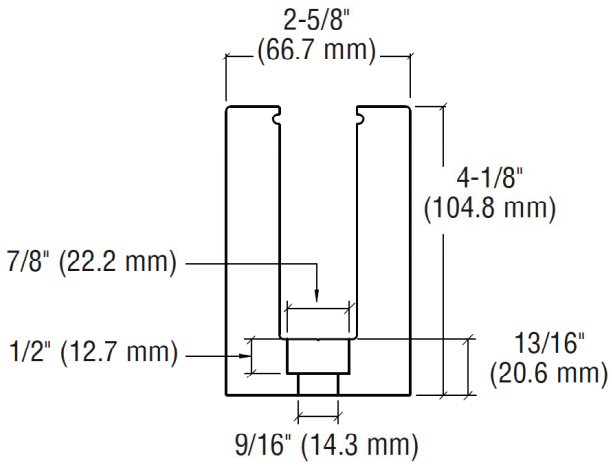

Shoe strength – Vertical legs:
Glass reaction by bearing on legs to form couple. Allowable moment on legs:
F/Ω = 11.3 ksi (ADM Table 2-20)
Z = 12"*0.75"^{2}*/4 = 1.69 in^3/ft
M_a = 11.3 ksi*1.69 in^3/ft = 19,100#"/ft

Leg shear strength @ groove
t_{min} = 0.343"
F_v= 5.5 ksi (ADM Table 2-23, Sec 3.4.20
V_{all} = 0.75"*12"/ft*5.5 ksi = 49.5 k/ft

Base shoe anchorage - B6N and 8B58:
Typical rail section: 42" high 50 plf top rail load or 25 psf panel load
M_t = 50plf*42" = 2,100"#/ft
M_w = 25 psf*3.5'*21" = 1,837.5"#

Typical Anchor load – 12" o.c. – T_a = 2,100"#/1.31" = 1,603#

Maximum allowable moment for 1/2" cap screws (T_a = 3,592# from B5S calculations) **12" on center spacing and direct bearing of base shoe on steel:**
M_a = 3,592#*[1.31"-0.5*3,592/(30ksi*12)] = 4,688"# = 390.6'# per anchor
Maximum allowable wind loads (ASD):
36" height: w = 390.6#'/(0.55*3^2)= 78.9 psf
42" height: w = 390.6#'/(0.55*3.5^2)= 58.0 psf

6" on center spacing and direct bearing of base shoe on steel:
M_a = 3,592#*[1.31"-0.5*3,592/(30ksi*6)] = 4,670"# = 389.14'# per anchor
Maximum allowable wind loads (ASD):
36" height: w = 2*389.14#'/(0.55*3^2)= 157.2 psf
42" height: w = 2*389.14#'/(0.55*3.5^2)= 115.5 psf

required spacing to develop full strength of ⅝" glass:
s = 4,688/6,797*12" = 8 ¼" on center average

EDWARD C. ROBISON, PE, SE
10012 Creviston Dr NW
Gig Harbor, WA 98329
253-858-0855/Fax 253-858-0856 elrobison@narrows.com

B6N Surface Mounted to Concrete:

For anchor into concrete:
3/8" diameter Screw-in anchor Hilti Kwik HUS-EZ (KH-EZ) ⅜" x 4" manufactured by Hilti in accordance with ESR-3027 or Hilti HSL-4 M8 x 3-3/4" anchor in accordance with ESR-4386.
Strength calculated in accordance with ACI 318-19 Chapter 17.
2-1/2" effective embedment
Minimum concrete strength: $f'_c \geq 3{,}000$ psi
$\phi N_{sa} = 0.65*4{,}400\# = 2{,}860\#$
For concrete breakout strength:
$N_{cb} = [A_{Nc}/A_{Nco}]\varphi_{ed,N}\varphi_{c,N}\varphi_{cp,N}N_b$
$A_{Nc} = (1.5*2.5"*2)*(1.5*2.5*2) = 56.25in^2$ **Edge distance = 3 3/4"**
$A_{Nco} = 9*2.5^2 = 56.25in^2$
$C_{amin} = 1.5*2.5" = 3.75$
$C_{ac} = 2.5*2.5" = 6.25$
$\varphi_{ed,N} = 1.0$
$\varphi_{c,N} = 1.0$ (from ESR-3027)
$\varphi_{cp,N} = 1.0$ (from ESR-3027)
$N_b = 24*1.0*\sqrt{3000}*2.5^{1.5} = 5{,}196\#$
$N_{cb} = 56.25/56.25*1.0*1.0*1.0*5{,}196 = 5{,}196\#$

From ESR-2526 anchor pull out does not control design
$\phi N_n = 0.65*5{,}196\# = 3{,}377\#$
$N_s = \phi N_n/1.6 = 3{,}377\#/1.6 = 2{,}111\#$
Anchor steel strength will not control

Moment resistance of each anchor:
For surface mounted
$\phi M_n = 3{,}377\#*[1.31-0.5*3{,}377/(2*0.85*3ksi*12)] = 4{,}331"\# = 360.9'\#$ per anchor
$M_a = \phi M_n/\lambda = 4{,}331"\#/1.6 = 2{,}707"\# = 225.58'\#$ (at 1' spacing doesn't develop full allowable glass load for 5/8" glass.)
Maximum allowable wind loads (ASD) for 12" o.c. anchors:
36" height: $w = 225.58\#'/(0.55*3^2) = 45.6$ psf
42" height: $w = 225.58\#'/(0.55*3.5^2) = 33.5$ psf

Minimum acceptable edge distance is 2.35" For 42" guard height and 12" o.c. spacing.
$A_{Nc} = (1.5*2.5"*2)*(1.5*2.5+2.35) = 45.75in^2$ **Minimum edge distance is 2.35"**
$N_{cb} = 45.75/56.25*1.0*1.0*1.0*5{,}196 = 4{,}226\#$
$\phi N_n = 0.65*4{,}226\# = 2{,}747\#$
$N_s = \phi N_n/1.6 = 2{,}747\#/1.6 = 1{,}717\#$
$\phi M_n = 2{,}747\#*[1.31-0.5*2{,}747/(2*0.85*3ksi*12)] = 3{,}537"\# = 294.7'\#$ per anchor
$M_a = \phi M_n/\lambda = 3{,}537"\#/1.6 = 2{,}211"\# = 184.2'\#$ (at 1' spacing doesn't develop full allowable glass load.)

EDWARD C. ROBISON, PE, SE
10012 Creviston Dr NW
Gig Harbor, WA 98329
253-858-0855/Fax 253-858-0856 elrobison@narrows.com

B6N Surface Mounted to Concrete continued:
Maximum allowable wind loads (ASD):
36" height: w = 184.2#'/(0.55*3^2) = 37.2 psf
42" height: w = 184.2#'/(0.55*3.5^2) = 27.3 psf

6" O.C. Anchor Spacing, 3.75" edge spacing:
A_{Nc}= (6)*(1.5*2.5*2) = 45in^2 **Edge distance = 3 3/4"**
N_{cb} = 45/56.25*1.0*1.0*1.0*5,196 = 4,157#
øN_n = 0.65*4,157# = 2,702#
N_s = øN_n/1.6 = 2,702#/1.6 = 1,689#
Moment resistance for anchors at 6" on center:
øM_n = 2*2,702#*[1.31-0.5*2*2,702/(2*0.85*3ksi*12)] = 6,560"# = 580'#/ft
M_a = øM_n/λ = 6,560"#/1.6 = 4,350"# = 362.5'#/ft
NOTE: When attached to concrete alternative anchors may be designed in accordance to the anchor manufacturer's engineering reports that can develop greater strength.

Maximum allowable wind loads (ASD):
36" height: w = 362.5#'/(0.55*3^2)= 73.23 psf
42" height: w = 362.5#'/(0.55*3.5^2) = 53.8 psf

6" O.C. Anchor Spacing, 1.75" edge spacing:
A_{Ncg}= (6)*(1.5*2.5+1.75) = 33in^2 **Minimum allowable edge distance is 1.75"**
N_{cb} = 33/56.25*1.0*1.0*1.0*5,196 = 3,048#
øN_n = 0.65*3,048# = 1,981#
N_s = øN_n/1.6 = 1,981#/1.6 = 1,238#
øM_n = 2*1,981#*[1.31-0.5*2*1,981/(2*0.85*3ksi*12)] = 5,062"# = 421.83'#/ft
M_a = øM_n/λ = 5,062"#/1.6 = 3,164"# = 263.64'# /ft
Maximum allowable wind loads (ASD) for anchors at 6" o.c. 1.75" edge distance:
36" height: w = 263.64#'/(0.55*3^2)= 53.3 psf
42" height: w = 263.64#'/(0.55*3.5^2) = 39.1 psf

FASCIA (SIDE) MOUNTED B6N BASE SHOE
For side mounted base shoe the allowable loads are the same as for the B5S shoe.
Alternative anchors will provide the same allowable loads as for the B5S base shoe therefore refer to the B5S calculations for the fascia (side) mounted options.

EDWARD C. ROBISON, PE, SE
10012 Creviston Dr NW
Gig Harbor, WA 98329
253-858-0855/Fax 253-858-0856 elrobison@narrows.com

B7S 2 3/4" X 4 1/8" GLASS BALUSTRADE BASE SHOE
Heavy Duty Square Base Shoe
6063-T52 Aluminum extrusion

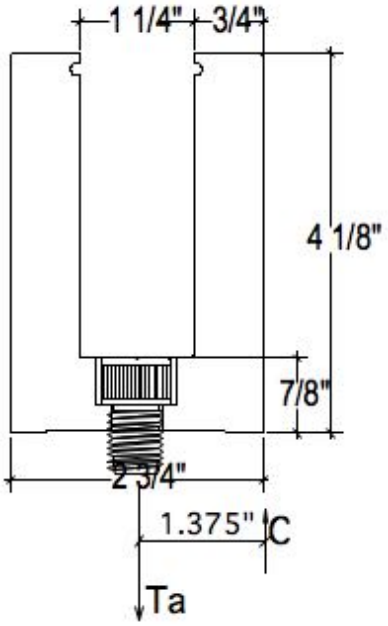

Fully tempered glass glazed in place, either wet glazing cement or Taper-Loc®.

Shoe strength – Vertical legs:
Glass reaction by bearing on legs to form couple. Allowable moment on legs:
F/Ω = 11.3 ksi (ADM Table 2-20)
Z = 12"*0.75"^{2}*/4 = 1.69 in^3/ft
M_a = 11.3 ksi*1.69 in^3/ft = 19,100#"/ft

Base shoe anchorage:
Typical rail section: 42" high 50 plf top rail load or 25 psf panel load
M_t = 50plf*42" = 2,100"#/ft
M_w = 25 psf*3.5'*21" = 1,837.5"#
Typical Anchor load – 12" o.c. – T_a = 2,100"#/1.375" = 1,527#

½" Cap Screw to Steel Supports - See B5S for anchor strength calculation.
Maximum allowable moment for 1/2" cap screws (T_a = 3,592#) 12" on center spacing and direct bearing of base shoe on steel:
M_a = 3,592#*[1.375"-0.5*3,592/(30ksi*12)] = 4,921"# = 410.09'# per anchor

Maximum allowable wind loads (ASD) for Cap screws at 12" o.c.:
36" height: w = 410.09#'/(0.55*3^2) = 82.8 psf
42" height: w = 410.09#'/(0.55*3.5^2) = 60.9 psf

Maximum allowable wind loads (ASD) for Cap screws at 6" o.c.:
M_a = 2*3,592#*[1.375"-0.5*2*3,592/(30ksi*12)] = 9,806"# = 817.19'#/ft
36" height: w = 817.19#'/(0.55*3^2) = 165.1 psf
42" height: w = 817.19#'/(0.55*3.5^2) = 121.3 psf

Required spacing to develop the full glass strength for wind loading (ASD):
s = 9,806/9,926*6" = 5.93" o.c.

EDWARD C. ROBISON, PE, SE
10012 Creviston Dr NW
Gig Harbor, WA 98329
253-858-0855/Fax 253-858-0856 elrobison@narrows.com

B7S Surface Mounted Continued:
For anchor into concrete:
3/8" diameter Screw-in anchor Hilti Kwik HUS-EZ (KH-EZ) ⅜" x 4" manufactured by Hilti in accordance with ESR-3027 or Hilti HSL-4 M8 x 3-3/4" anchor in accordance with ESR-4386. Strength calculated in accordance with ACI 318-19 Chapter 17.
$f'_c \geq 3{,}000$ psi
2-1/2" effective embedment
$\phi N_{sa} = 0.65*4{,}400\# = 2{,}860\#$
For concrete breakout strength:
$N_{cb} = [A_{Nc}/A_{Nco}]\varphi_{ed,N}\varphi_{c,N}\varphi_{cp,N}N_b$
$A_{Nc}= (1.5*2.5"*2)*(1.5*2.5*2) = 56.25in^2$ **Edge distance = 3 ¾"**
$A_{Nco}= 9*2.5^2 = 56.25in^2$
$C_{amin} = 1.5*2.5" = 3.75$
$C_{ac} = 2.5*2.5" = 6.25$
$\varphi_{ed,N} = 1.0$
$\varphi_{c,N} = 1.0$ (from ESR-3027)
$\varphi_{cp,N}= 1.0$ (from ESR-3027)
$N_b = 24*1.0*\sqrt{3000}*2.5^{1.5} = 5{,}196\#$
$N_{cb} = 56.25/56.25*1.0*1.0*1.0*5{,}196 = 5{,}196\#$

From ESR-3027 anchor pull out does not control design
$\phi N_n = 0.65*5{,}196\# = 3{,}377\#$
$N_s = \phi N_n/1.6 = 3{,}377\#/1.6 = 2{,}111\#$

Anchor steel strength will not control

Moment resistance of each anchor:
For surface mounted
$\phi M_n = 3{,}377\#*[1.375-0.5*3{,}377/(2*0.85*3ksi*12)] = 4{,}550"\# = 379.2'\#$ per anchor
$M_a = \phi M_n/\lambda = 4{,}550"\#/1.6 = 2{,}844"\# = 237.0'\#$ (at 1' spacing doesn't develop full allowable glass load for 5/8" or 3/4" glass.)

Maximum allowable wind loads (ASD) for concrete anchors at 12" o.c. and 3 ¾" edge distance:
36" height: $w = 237.0\#'/(0.55*3^2) = 47.9$ psf
42" height: $w = 237.0\#'/(0.55*3.5^2) = 35.2$ psf

Minimum acceptable edge distance is 2.35" For 42" guard height and 12"o.c. spacing.
$A_{Nc}= (1.5*2.5"*2)*(1.5*2.5+2.35) = 45.75in^2$ **Minimum edge distance is 2.35"**
$N_{cb} = 45.75/56.25*1.0*1.0*1.0*5{,}196 = 4{,}226\#$
$\phi N_n = 0.65*4{,}226\# = 2{,}747\#$
$N_s = \phi N_n/1.6 = 2{,}747\#/1.6 = 1{,}717\#$
$\phi M_n = 2{,}747\#*[1.375-0.5*2{,}747/(2*0.85*3ksi*12)] = 3{,}715"\# = 309.6'\#$ per anchor

EDWARD C. ROBISON, PE, SE
10012 Creviston Dr NW
Gig Harbor, WA 98329
253-858-0855/Fax 253-858-0856 elrobison@narrows.com

B7S Surface Mounted to Concrete Continued:

$M_a = øM_n/\lambda$ = 3,715"#/1.6 = 2,322"# = 193.5 (at 1' spacing doesn't develop full allowable glass load.)
Maximum allowable wind loads (ASD):
36" height: w = 193.5#'/(0.55*3^2) = 39.1 psf
42" height: w = 193.5#'/(0.55*3.5^2) = 28.7 psf

6" O.C. Anchor Spacing, 3.75" edge spacing:
A_{Nc}= (6)*(1.5*2.5*2) = 45in^2 **Edge distance = 3 3/4"**
N_{cb} = 45/56.25*1.0*1.0*1.0*5,196 = 4,157#
$øN_n$ = 0.65*4,157# = 2,702#
$N_s = øN_n/1.6$ = 2,702#/1.6 = 1,689#
Moment resistance for anchors at 6" on center:
$øM_n$ = 2*2,702#*[1.375-2*0.5*2,702/(2*0.85*3ksi*12)] = 7,192"# = 599.33'#/ft
$M_a = øM_n/\lambda$ = 7,192"#/1.6 = 4,495"# = 374.58'#/ft
NOTE: When attached to concrete alternative anchors may be designed in accordance to the anchor manufacturer's engineering reports that can develop greater strength.

Maximum allowable wind loads (ASD):
36" height: w = 374.58#'/(0.55*3^2)= 75.7 psf
42" height: w = 374.58#'/(0.55*3.5^2) = 55.6 psf

6" O.C. Anchor Spacing, 2.35" edge spacing:
A_{Ncg}= (6)*(1.5*2.5+2.35) = 36.6in^2 **Edge distance = 2.35"**
N_{cb} = 36.6/56.25*1.0*1.0*1.0*5,196 = 3,381#
$øN_n$ = 0.65*3,381# = 2,198#
$N_s = øN_n/1.6$ = 2,198#/1.6 = 1,373#
$øM_n$ = 2*2,198#*[1.375-0.5*2*2,198/(2*0.85*3ksi*12)] = 5,887"# = 490.55'#
$M_a = øM_n/\lambda$ = 5,887"#/1.6 = 3,679"# = 306.59'#
Maximum allowable wind loads (ASD) for anchors at 6" o.c. 2.35" edge distance:
36" height: w = 306.59#'/(0.55*3^2)= 61.9 psf
42" height: w = 306.59#'/(0.55*3.5^2) = 45.5 psf

EDWARD C. ROBISON, PE, SE
10012 Creviston Dr NW
Gig Harbor, WA 98329
253-858-0855/Fax 253-858-0856 elrobison@narrows.com

B7S Surface Mounted to Concrete Continued:

6" O.C. Anchor Spacing, 1.75" edge spacing:
A_{Ncg}= (6)*(1.5*2.5+1.75) = 33in^2 **Minimum allowable edge distance is 1.75"**
N_{cb} = 33/56.25*1.0*1.0*1.0*5,196 = 3,048#
øN_n = 0.65*3,048# = 1,981#
N_s = øN_n/1.6 = 1,981#/1.6 = 1,238#
øM_n = 2*1,981#*[1.375-0.5*2*1,981/(2*0.85*3ksi*12)] = 5,320"# = 443.29'#
M_a = øM_n/λ = 5,320"#/1.6 = 3,325"# = 277.06'#

Maximum allowable wind loads (ASD) for anchors at 6" o.c. 1.75" edge distance:

36" height: w = 277.06#'/(0.55*3^2)= 56.0 psf

42" height: w = 277.06#'/(0.55*3.5^2) = 41.1 psf

FASCIA (SIDE) MOUNTED B7S BASE SHOE
For side mounted base the allowable loads are the same as for the 2-1/2" wide shoe. Alternative anchors will provide the same allowable loads as for the 2-1/2" wide base shoe (B5S).

EDWARD C. ROBISON, PE, SE
10012 Creviston Dr NW
Gig Harbor, WA 98329
253-858-0855/Fax 253-858-0856 elrobison@narrows.com

DRAIN BLOCKS

Drain blocks may be used under the base shoe to provide a water drainage path on exterior decks.

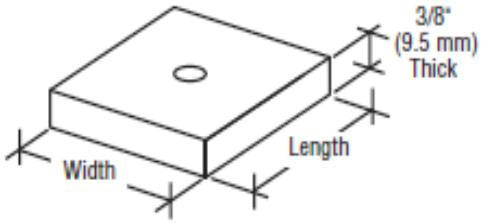

When used on steel substrate there the reduction in the allowable loads is calculated as:
M = 3,592#*[1.25"-0.5*3,592/(15ksi*2.25)] = 4,299

Not to be used on wood substrate, refer to wood attachment brackets in this report.

When used on concrete the allowable loads are adjusted as follows:

B5S and B5T base shoes: 2.5"x 2.25"

For 3-3/4" anchor edge distance

Maximum allowable wind loads (ASD) **for 12" spacing:**
M_a = 2,111#*[1.25-0.5*2,111/(2*0.85*3ksi*2.25)] = 2,445"# = 203.7'# per anchor
36" height: w = 203.7'#/(0.55*3^2) = 41.2 psf
42" height: w = 203.7'#/(0.55*3.5^2) = 30.2 psf

Maximum allowable wind loads (ASD) **for 6" spacing:**
M_a = 2*1,689#*[1.25-0.5*1,689/(2*0.85*3ksi*2.25)] = 3,974"# = 331.16'# per anchor
36" height: w = 331.16'#/(0.55*3^2) = 66.9 psf
42" height: w = 331.16'#/(0.55*3.5^2) = 49.2 psf

For minimum edge distance = 2.35"

Maximum allowable wind loads (ASD) **(12" o.c. spacing):**
M_a = 1,717#*[1.25-0.5*1,717/(2*0.85*3ksi*2.25)] = 2,018"# = 168.2'# per anchor
Anchor spacing must be decreased for 42" guard height when 50 plf live load applies.
$S_{50\text{-}42}$ = 2,018"#/ft/(50*42")*12 = 11.5" o.c. (use 11 anchors for 10' section)
36" height: w = 168.2#'/(0.55*3^2) = 34.0 psf
42" height: w = 11/10*168.2#'/(0.55*3.5^2) = 27.5 psf (11 anchors per 10' section)

Maximum allowable wind loads (ASD) **for 6" spacing:**
M_a = 2*1,373#*[1.25-0.5*1,373/(2*0.85*3ksi*2.25)] = 3,268"# = 272.35'# per anchor
36" height: w = 272.35'#/(0.55*3^2) = 55.0 psf
42" height: w = 272.35'#/(0.55*3.5^2) = 40.4 psf

EDWARD C. ROBISON, PE, SE
10012 Creviston Dr NW
Gig Harbor, WA 98329
253-858-0855/Fax 253-858-0856 elrobison@narrows.com

B5L base shoe: 2.25" x 2.5"

For 3-3/4" anchor edge distance

Maximum allowable wind loads (ASD) **for 12" spacing:**
M_a = 2,111#*[1.125-0.5*2,111/(2*0.85*3ksi*2.5)] = 2,200"# = 183.3'# per anchor
36" height: w = 183.3'#/(0.55*3^2) = 37.0 psf
42" height: w = 183.3'#/(0.55*3.5^2) = 27.2 psf

Maximum allowable wind loads (ASD) **for 6" spacing:**
M_a = 2*1,689#*[1.125-0.5*1,689/(2*0.85*3ksi*2.5)] = 3,577"# = 298.04'# per anchor
36" height: w = 298.04#/(0.55*3^2) = 60.2 psf
42" height: w = 298.04'#/(0.55*3.5^2) = 44.2 psf

For minimum edge distance is 2.35"

Maximum allowable wind loads (ASD) **for 12" o.c. spacing:**
M_a = 1,717#*[1.125-0.5*1,717/(2*0.85*3ksi*2.5)] = 1,816"# = 151.3'# per anchor
Anchor spacing must be decreased for 42" guard height when 50 plf live load applies.
$S_{50\text{-}42}$ = 1,816"#/ft/(50*42")*12 = 10-3/8" o.c. (use 12 anchors for 10' section)
36" height: w = 151.3#/(0.55*3^2) = 30.6 psf
42" height: w = 12/10*151.3#'/(0.55*3.5^2)= 26.9 psf (use 12 anchors for 10' section)

Maximum allowable wind loads (ASD) **for 6" spacing:**
M_a = 2*1,373#*[1.125-0.5*1,373/(2*0.85*3ksi*2.5)] = 2,941"# = 245.12'# per anchor
36" height: w = 245.12'#/(0.55*3^2) = 49.5 psf
42" height: w = 245.12'#/(0.55*3.5^2) = 36.4 psf

EDWARD C. ROBISON, PE, SE
10012 Creviston Dr NW
Gig Harbor, WA 98329
253-858-0855/Fax 253-858-0856 elrobison@narrows.com

Drain Blocks Continued:

B6N base shoe: 2.625"x 2.75"

For 3-3/4" anchor edge distance
Maximum allowable wind loads (ASD) **for 12" spacing:**
M_a = 2,111#*[1.312-0.5*2,111/(2*0.85*3ksi*2.75)] = 2,611"# = 217.56'# per anchor
36" height: w = 217.56'#/(0.55*3^2) = 44.0 psf
42" height: w = 217.56'#/(0.55*3.5^2) = 32.3 psf

Maximum allowable wind loads (ASD) **for 6" spacing:**
M_a = 2*1,689#*[1.312-0.5*1,689/(2*0.85*3ksi*2.75)] = 4,229"# = 352.38'# per anchor
36" height: w = 352.38'#/(0.55*3^2) = 71.2 psf
42" height: w = 352.28'#/(0.55*3.5^2) = 52.3 psf

For minimum edge distance is 2.35"
Maximum allowable wind loads (ASD)**(12" o.c. spacing):**
M_a = 1,717#*[1.312-0.5*1,717/(2*0.85*3ksi*2.75)] = 2,148"# = 178.97'# per anchor
36" height: w = 178.97#'/(0.55*3^2) = 36.2 psf
42" height: w = 178.97#'/(0.55*3.5^2) = 26.6 psf

Maximum allowable wind loads (ASD) **for 6" spacing:**
M_a = 2*1,373#*[1.312-0.5*1,373/(2*0.85*3ksi*2.75)] = 3,468"# = 289.03'# per anchor
36" height: w = 289.03'#/(0.55*3^2) = 58.4 psf
42" height: w = 289.03'#/(0.55*3.5^2) = 42.9 psf

B7S base shoe: 2.75" x 2.625"

For 3-3/4" anchor edge distance
Maximum allowable wind loads (ASD) **for 12" spacing:**
M_a = 2,111#*[1.375-0.5*2,111/(2*0.85*3ksi*2.625)] = 2,736"# = 228.02'# per anchor
36" height: w = 227.3'#/(0.55*3^2) = 50.5 psf
42" height: w = 227.3'#*2/3.5^2 = 37.1 psf

Maximum allowable wind loads (ASD) **for 6" spacing:**
M_a = 2*1,689#*[1.375-0.5*1,689/(2*0.85*3ksi*2.625)]= 4,432"# = 369.31'# per anchor
36" height: w = 369.31'#/(0.55*3^2) = 74.6 psf
42" height: w = 369.31'#/(0.55*3.5^2) = 54.8 psf

EDWARD C. ROBISON, PE, SE
10012 Creviston Dr NW
Gig Harbor, WA 98329
253-858-0855/Fax 253-858-0856 elrobison@narrows.com

Drain Blocks Continued:
B7S base shoe: 2.75" x 2.625"

For minimum edge distance is 2.35"
Maximum allowable wind loads ((ASD) **12" o.c. spacing):**
M_a = 1,717#*[1.375-0.5*1,717/(2*0.85*3ksi*2.5)] = 2,245"# = 187.1'# per anchor
36" height: w = 187.1#'*2/3^2 = 41.6 psf
42" height: w = 187.1#'*2/3.5^2 = 30.5 psf

Maximum allowable wind loads (ASD) **for 6" spacing:**
M_a = 2*1,373#*[1.375-0.5*1,373/(2*0.85*3ksi*2.625)]= 3,635"# = 302.91'# per anchor
36" height: w = 302.91'#/(0.55*3^2) = 61.2 psf
42" height: w = 302.91'#/(0.55*3.5^2) = 45.0 psf

WELD BLOCKS:
When attaching the base shoe to the appropriate steel weld blocks the strength shall be the same as for the base shoe attachment to steel substrate. Weld block size shall be matched to the base shoe width.

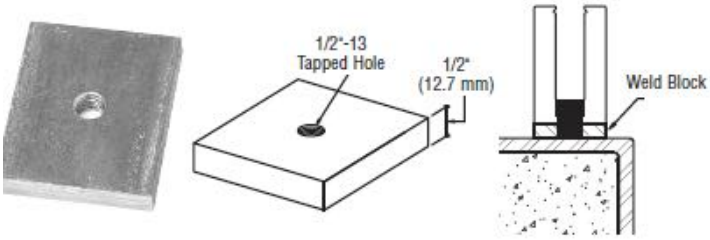

CONCRETE ANCHORS ADJUSTMENTS
The strength of the post installed mechanical concrete anchors are a direct function of the square root of the concrete compressive strength:

$$P_n = f(\sqrt{f'_c})$$

Thus the allowable loads shown in this report for the base shoes mounted to concrete may be adjusted for concrete strengths other than 3,000 psi by:

$$W' = \frac{W*\sqrt{X}}{\sqrt{3{,}000}}$$

where:
W = allowable wind load (ASD) calculated for the specific base shoe and anchorage
X = f'_c; compressive strength of concrete at time the anchor is installed.

Use of other post installed anchors or different embedment conditions require calculations for the specific condition.

SAND LIGHT-WEIGHT CONCRETE:
Allowable loads to be multiplied by 0.6 when anchors are installed in sand light-weight concrete.

$$W' = 0.6*W$$

EDWARD C. ROBISON, PE, SE
10012 Creviston Dr NW
Gig Harbor, WA 98329
253-858-0855/Fax 253-858-0856 elrobison@narrows.com

SURFACE MOUNTING BASE SHOES TO WOOD DECKS:

The base shoe overturning resistance develops by forming a couple between the anchor tension and compression between the base shoe edge and the substrate. Wood doesn't have adequate bearing compressive strength to reliably develop the requisite compressive strength when surface mounted on weather exposed wood. The shoe may be initially installed tight and appear to perform adequately; but cyclic loading and weathering will cause permanent deformation of the wood surface and loss of anchor pretension. This will result in rotation of the base shoe and increased couple forces resulting in excessive guard deflections and possible failure. For this reason the base shoes should not be surface mounted directly to weather exposed wood when moment exceeds 1,000"#/ft.

It is recommended that whenever possible the base shoe should use the fascia mount when attaching to wood.

When surface mounting to weather exposed wood a steel or aluminum bar or angle may be installed on the wood surface first. The bar or angle shall be designed to safely transfer the imposed loads from the base shoe to the wood deck. Attachment to the bar or angle shall be as specified previously.

Steel angle or plate bolted to wood deck with base shoe anchored to the plate or angle using 1/2" cap screws into threaded weld blocks or tapped holes.

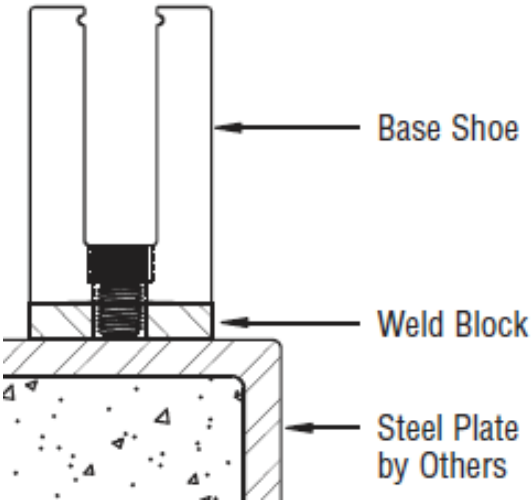

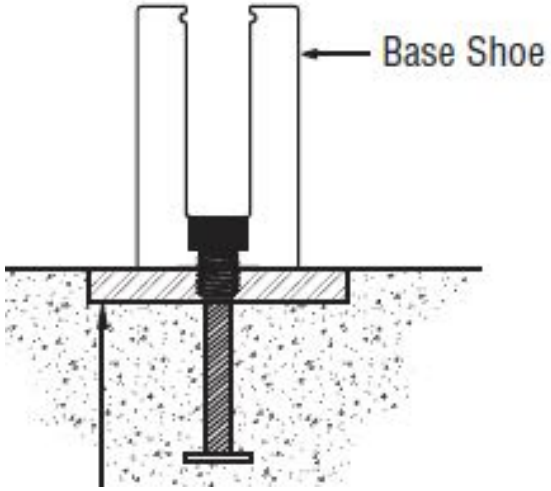

EDWARD C. ROBISON, PE, SE
10012 Creviston Dr NW
Gig Harbor, WA 98329
253-858-0855/Fax 253-858-0856 elrobison@narrows.com

Surface Mounting Base Shoes to Wood Decks:
Aluminum Angle Bracket Welded to Base Shoe Alternative-

Weld strength calculated in accordance with ADM 7.3.2 Fillet Welds
Base shoe metal - 6063-T52
Angle metal- 6063-T5
Weld metal 4043

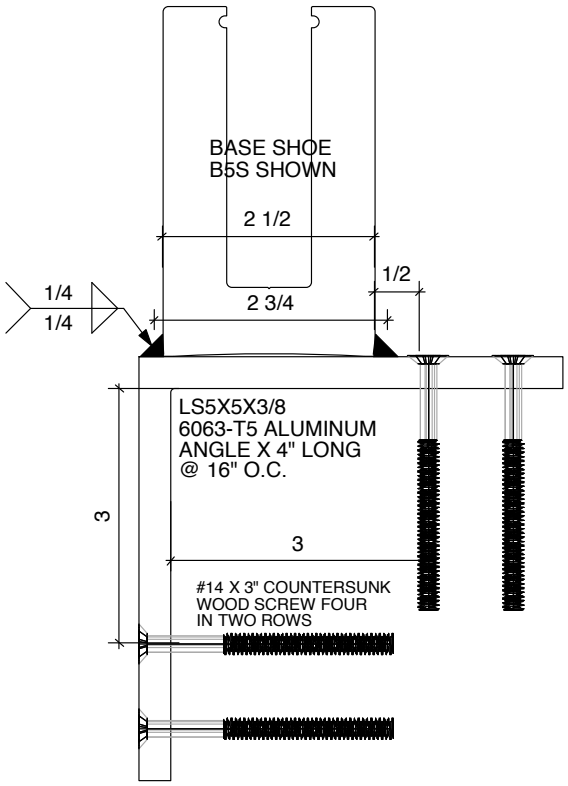

Weld size:
¼" fillet, throat = $0.25/\sqrt{2} = 0.177$"

Design strength: ADM 7.3.2.2
$V_w = F_{sw}L_{we}/n_u$
For shear through weld throat:
F_{sw} = 11.5 ksi from ADM Table 7.3-1
V_{ww}=11.5ksi*0.177"*12"/1.95 =12,526 plf

For base metal shear failure:
F_{suw} = 11.0 ksi from ADM Table 3.3-2
V_{wb} = 11.0ksi*0.25"*12"/1.95 = 16,922 plf

Moment overturning of base shoe-
Shear strength of weld restrains base shoe rotation about opposite corner:
M_a = 12,526plf* 2.5"*4/12 = 10,438"# per 4" bracket

Check strength of weld affected angle:
From ADM Table 2-20W for allowable aluminum stresses
bending of flat element - weld-affected
F_{tw}/Ω = 8.7ksi
$Z = 4*0.375^2/4 = 0.141in^3$
M_{aw} = 8,700psi* $0.141in^3$ = 1,230"#
Maximum allowable anchor force based on outward force (controls)
R_u = 609"#/0.5" = 1,218#
Maximum allowable moment on base shoe per 4" bracket:
$M_{a5"}$ = 1,218#*3"+ 609"# = 4,263"#

Allowable moment per foot for brackets at 16" on center
M_a = 4,263/1.3333' = 3,197"#/ft = 266.44'#/ft

Strength for continuous angle:
M_{cont} = 4,263*12/4 = 12,789"#/ft

EDWARD C. ROBISON, PE, SE
10012 Creviston Dr NW
Gig Harbor, WA 98329
253-858-0855/Fax 253-858-0856 elrobison@narrows.com

Base Shoe Welded to Aluminum Angle Continued:
For wood screws into solid wood (DFL, Southern Pine or equivalent density G≥0.49):
1/4" Wood screws strength in per *National Design Specification for Wood Construction*:
W = 165 pli embedment From NDS Table 11.2B
For dry or interior applications, $C_m = 1.0$, $C_D = 1.33$
Embed depth = 2" thread length typical
W' = 165#/"*2"*1.33) = 440#

Moment resistance per screw = 440#*3" = 1,320"#
Number of screws required to develop the full strength of 4" bracket:
4,263/1,320 = 3.23 Requires 4 screws.
$M_{ascrews}$ = 4*1,320"# = 5,280#
Bearing pressure on wood for maximum bracket moment:
f_B = (4,263"#/3")/(4"*2") = 178 psi ≤ 625 psi

M_{ai} = 4,263/1.3333' = 3,197"#/ft = 266.44'#/ft
Maximum allowable wind loads (ASD) for brackets at 16" on center spacing, dry location:

36" height: w = 266.4'#/(0.55*3^2) = 53.8 psf

42" height: w = 266.4'#/(0.55*3.5^2) = 39.5 psf

For exterior wet applications, $C_m = 0.7$ applies when moisture content of wood may exceed 19%, $C_D = 1.33$
Strength of 4 screws:
W" =4*(0.7*1,320) = 3,696"#
M_{ao} = 3,696/1.3333' = 2,772"#/ft = 231.00'#/ft
Maximum allowable wind loads (ASD) for brackets at 16" on center spacing, exterior location:

36" height: w = 231.0'#/(0.55*3^2) = 46.7 psf

42" height: w = 231.0'#/(0.55*3.5^2) = 34.3 psf

Continuous Aluminum angle-
For continuous angle with screws installed in pairs each leg at 8" on center strength same as calculated for 4" bracket at 16" on center.

For screw pairs at X inches on center:
M_{aix} = 12"/X*(2*1,320"#/12"/ft) = [2,640/X]'#/ft Dry locations
M_{aox} = 0.7*[2,640/X]'#/ft = [1,848/X]'#/ft Exterior locations
For example: X = 4"
M_{ai4} = [2,640/4]'#/ft = 660.0'#/ft Dry locations

42" height: w = 660.0'#/(0.55*3.5^2) = 98.0 psf
M_{ao4} = [1,848/4]'#/ft = 462.0'#/ft Exterior locations

42" height: w = 462.0'#/(0.55*3.5^2) = 68.6 psf

EDWARD C. ROBISON, PE, SE
10012 Creviston Dr NW
Gig Harbor, WA 98329
253-858-0855/Fax 253-858-0856 elrobison@narrows.com

Surface Mounting Base Shoes to Wood Decks:
Base Shoe to Steel Angle Bracket Alternative-

For ½" cap screw into tapped angle strength refer to appropriate base shoe calculations.

Check angle thickness:
$F_{tw} = F_{cw} = 30ksi$ (304 SS)
$S_f = 4*0.3125^2/6 = 0.0651in^3$
$øM_n = 0.9*1.25*30{,}000*0.0651in^3 = 2{,}197"\#$
Maximum base shoe moment per 4" bracket:
$M_a = 2{,}197/0.5 + 2{,}197 = 6{,}591"\#$
For ½" cap screw at 16" o.c into 4" bracket:
For B5S base shoe-
$M = 3{,}592\#*[1.25"-0.5*3{,}592/(30ksi*4)] = 4{,}436"\# = 369.69'\#$ per anchor/bracket
Wood screw pullout strength will control, see previous page.

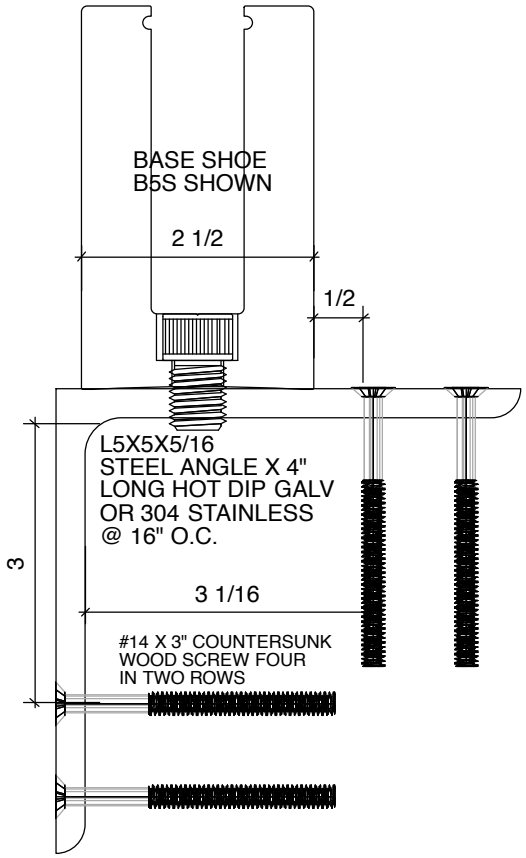

For continuous steel angle:
$M_a = 6{,}591*12/3 = 19{,}773"\#$
Attachment strength is 372.5'# per cap screw, cap screw spacing may be calculated from:

$$s_{cs} = \frac{(372.5'\#)*12}{(M'\#/ft)}$$

Strength of angle attachment to deck refer to calculations for aluminum angle, previous page.

Steel angle may be either A36 hot dipped galvanized or 304 or 316 stainless steel.

Minimum angle thickness is ¼" based on cap screw thread engagement.

EDWARD C. ROBISON, PE, SE
10012 Creviston Dr NW
Gig Harbor, WA 98329
253-858-0855/Fax 253-858-0856 elrobison@narrows.com

Surface Mounting Base Shoe to Solid Wood:
Dry Use Locations Only

⅜" x 5" Lag screws:
Lag withdrawal strength in accordance with the NDS:
W = 296#/in for G = 0.49
C_D = 1.6 for guard applications - guard live loads and wind loads
W' = 296*1.6= 474#/in

For 3 5/8" embedment into solid wood:
T_a = 3.62"*474#/in = 1,712# ≤ 0.75*0.10*45,000psi/1.6 = 2,110#

Bearing strength on wood f_B = 625 psi
For lag screws at 12"on center
M_{ia} = 1,678*(1.25-0.5*1,712/(12*625psi) = 1,906"#/ft = 158.8'#
May be used for interior private residence installations only.
Minimum required length:
200#*36"/1,906 = 3.78' for 36" guard height minimum 4 anchors
200#*42"/1,906 = 4.41' for 42" guard height minimum 5 anchors

For lag screws at 6" on center:
M_{ia} = 2*1,678*(1.25-0.5*1,712/(6*625psi) = 3,429"#/ft = 286'#
May be used where 50 plf live load is applicable.
Minimum length
200#*36"/3,429 = 2.1' for 36" guard height minimum 5 anchors
200#*42"/3,429 = 2.45' for 42" guard height minimum 5 anchors

EDWARD C. ROBISON, PE, SE
10012 Creviston Dr NW
Gig Harbor, WA 98329
253-858-0855/Fax 253-858-0856 elrobison@narrows.com

INSTALLATION ALONG STAIRS:

For installations along stairs where the bottom shoe fully supports the bottom edge of the glass and the cap/grab rail is parallel to the base shoe the glass stresses and base shoe loads are the same as for the standard horizontal installation based on measuring the glass height perpendicular to the base shoe.

For glass stress and live loads:
When glass height is ≤ 50" then ½" glass may be used for live loads.
When glass height is ≤ 64" may use ⅝" glass.
When glass height is ≤ 77" may use ¾" glass.

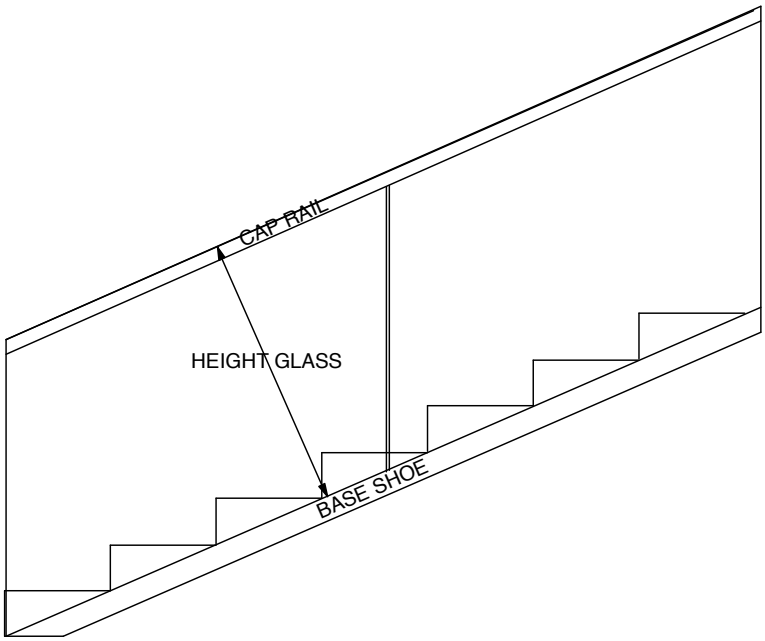

At the maximum heights deflections will control. Recommend limiting glass heights to:

hg ≤ 48" for ½" glass
hg ≤ 56" for ⅝"
hg ≤ 64" for ¾"

Verify glass thickness for wind loading.

Check base shoe anchorage using the appropriate mounting type and base shoe.

Irregular glass light shapes or intermittent base shoes are outside of the scope of this report.

LIMITATIONS OF THIS REPORT

This report is to provide guidance on how to use the GRS glass balustrade system in a code compliant installation and is not a substitute for a project specific design by a qualified design professional. It is the specifier's responsibility to verify the project conditions and the suitability of the system for any specific use or installation.

EDWARD C. ROBISON, PE, SE
10012 Creviston Dr NW
Gig Harbor, WA 98329
253-858-0855/Fax 253-858-0856 elrobison@narrows.com