GLASS: 5/16" (8mm)
GLASS: 3/8" (10mm)
GLASS: 1/2" (12mm)

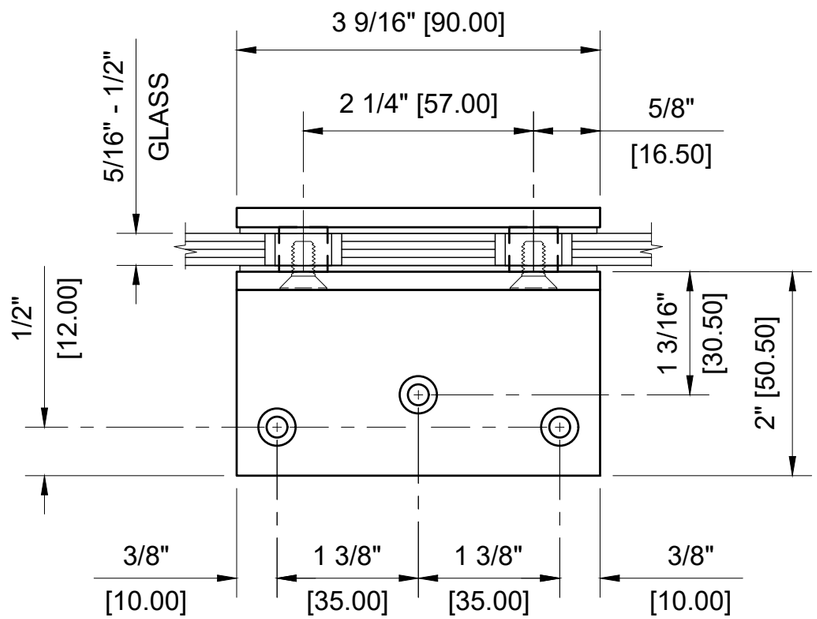

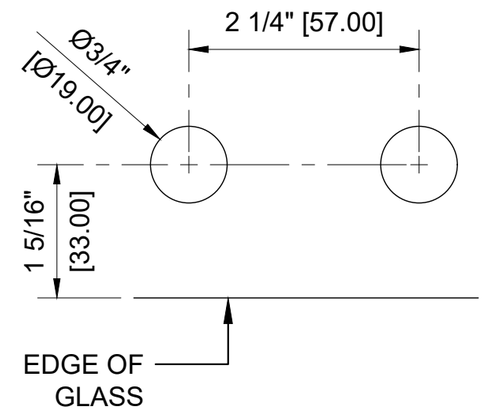

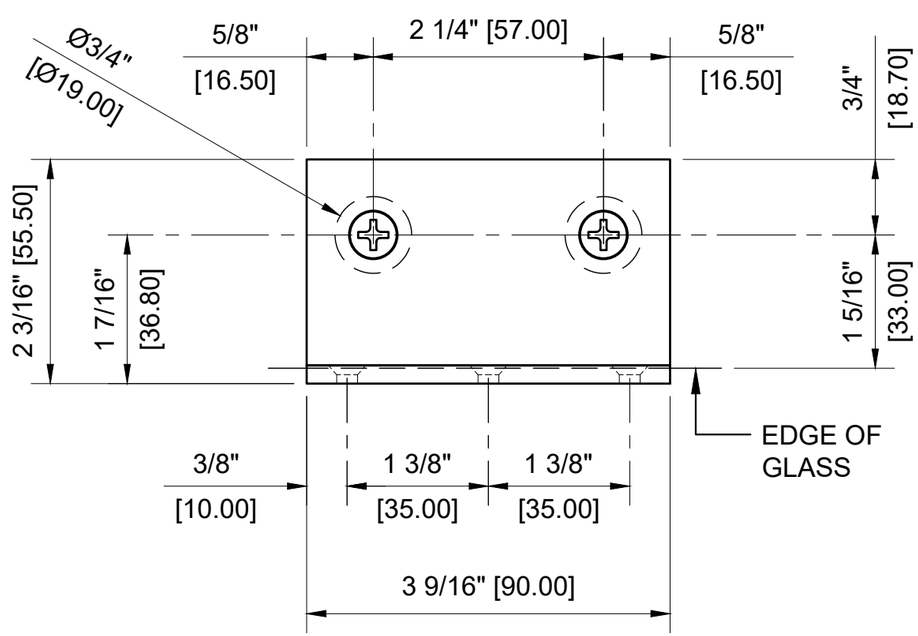

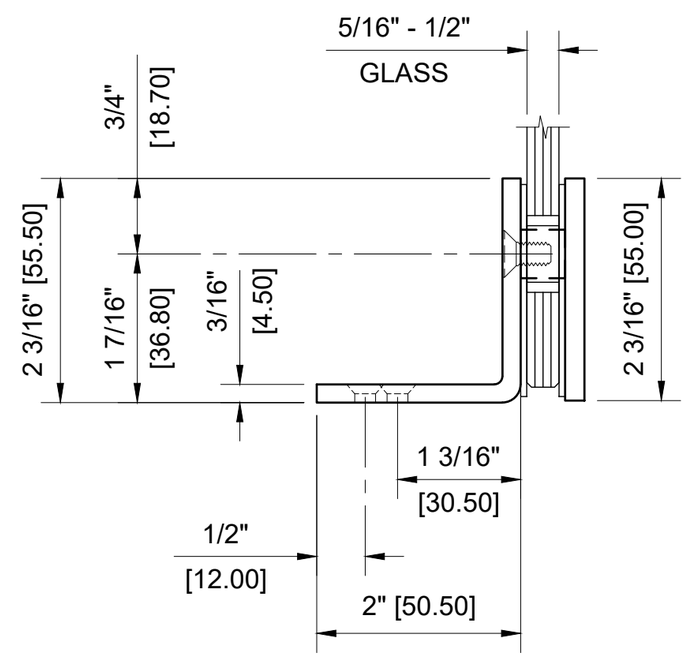

CRL - GE90S GENEVA SERIES WALL MOUNT GLASS BRACKET FOR 5/16" - 1/2" GLASS

DATE: 11-18-2020
SCALE: 6"=1'-0"
DRAWN BY: VM

DESCRIPTION: CRL - GE90S
GENEVA SERIES WALL MOUNT GLASS BRACKET

CRL.
C.R.LAURENCE CO. ARCHITECTURAL PRODUCTS
2503 E. Vernon Avenue, Los Angeles, C.A 90058-1897
PH (800)-421-6144 FX: 800-587-7501 www. crlaurence.com